Large Volume Water Heaters

Large volume electric commercial water heaters save energy and are available in 150 to 2,500-gallon storage models

Features & Benefits

Large volume electric high power commercial water heaters are now available in 150 to 2,500-gallon storage – vertical round, vertical square and horizontal – with energy saving performance!

- Glass lined steel tank
- Incoloy™ heating elements
- Internal fusing (above 120 amps)
- Enamel finished galvanized steel jacket
- Magnesium anodes
- Immersion thermostat
- Manual reset high limit
- Full length hinged doors with key lock
- Terminal block connections
- ASME temperature and pressure relief valve
- Channel iron skid base (except 150 & 200-gallon round models)
- 180° F temperature operation
- 125 PSI working pressure
- Hand-hole sediment cleanout
- Safety drain pan (square models)
- Control voltage on/off switch with pilot light

Optional Features

- Low water cut-off
- Pilot lights
- Manual limiting switches
- Alarm bell
- Shunt trip disconnect (Field installed)
- Low or high water pressure switch
- Lifting lugs
- Time clock (7 day or 24 hour)
- Safety door interlock
- Temperature and pressure gauges
- Manway (250-gallon and larger capacity models only)
- 150 psi or 160 psi working pressure
- Electronic step controller
- Seismic attachment point (250 gallon and larger – specify city, state and seismic zone)

Warranty

3-Year limited tank warranty

See Commercial Warranty Certificate for complete information

Efficiency | All models meet or exceed ASHRAE energy efficiency standards

Safety and Construction | ASME construction and National Board listed and UL 1453 listed

Ruud Large Volume Electric

150 to 2,500-Gallon Capacities
Voltages: 208, 240, 277, 380, 415, 480 and 600
Vertical Round & Square and Horizontal

PRINTED IN U.S.A. 11/12 WP FORM NO. RR102CE-8R

Vertical Round Models 150-1000

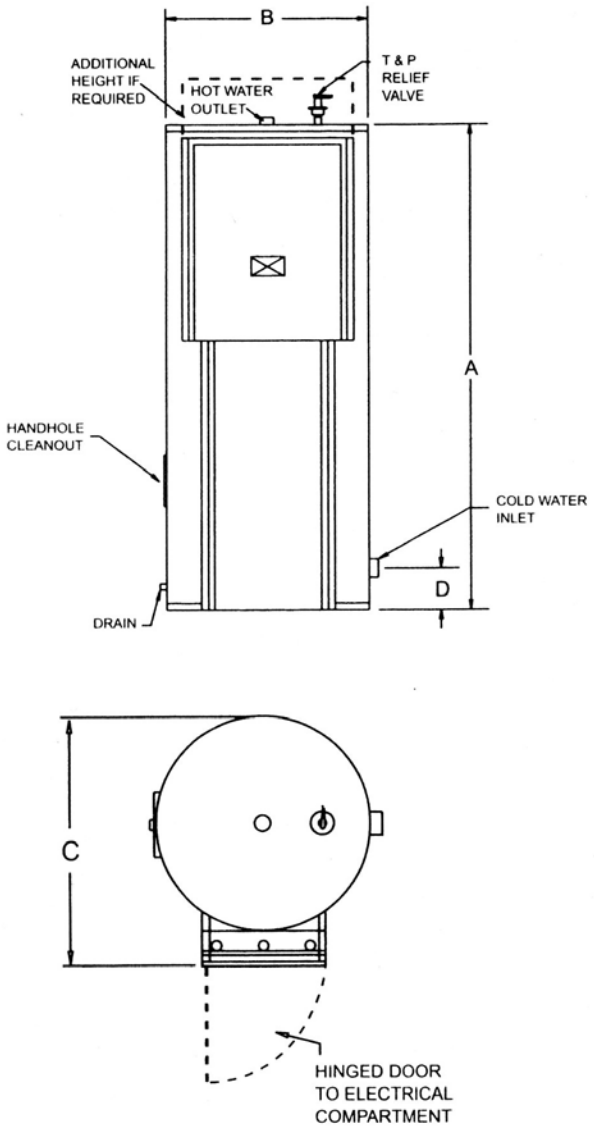

Vertical Square Models 1250-2500

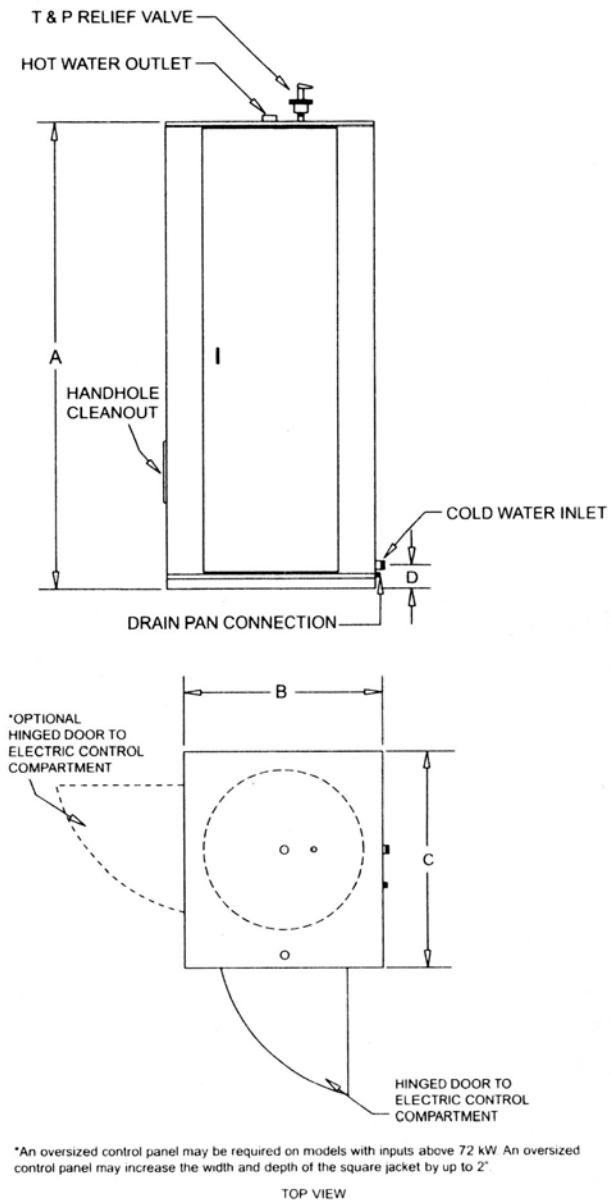

Horizontal Models

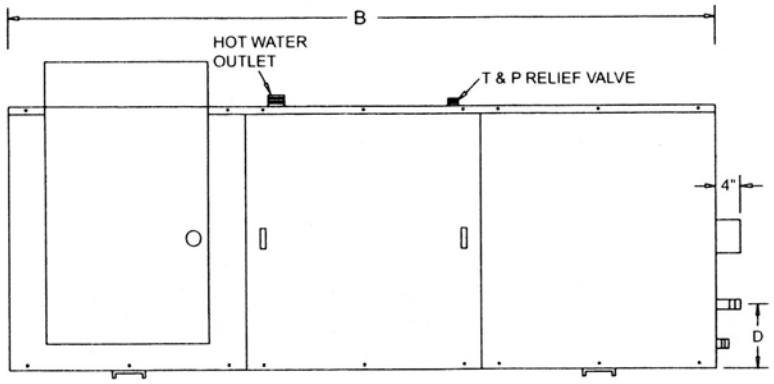

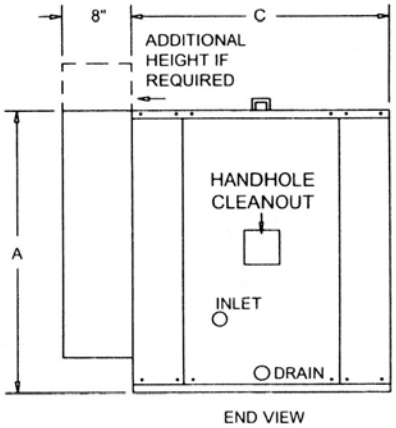

Dimensional Information

MODEL NUMBER	MAX. KW	GALLON CAPACITY	A	B	C	D	WATER CONNECTION		APPROX. SHIP. WEIGHT
							INLET	OUTLET	
VERTICAL ROUND									
EVRO150	144	150	65-1/2	32	38-3/4	7-3/4	1-1/2	1-1/2	650 lbs.
EVRO200	162	200	78	32	38-3/4	7-3/4	1-1/2	1-1/2	750 lbs.
EVRO250	162	250	92	34	40-3/4	19-1/2	1-1/2	1-1/2	1,165 lbs.
EVRO300	162	300	80	40	46-3/4	21	2	2	1,350 lbs.
EVRO400	162	400	80	46	52-3/4	22-1/2	2	2	1,590 lbs.
EVRO500	396	500	92	46	52-3/4	22-1/2	2	2	1,700 lbs.
EVRO600	396	600	92	52	60-3/4	24-1/2	2-1/2	2-1/2	2,010 lbs.
EVRO800	396	750	104	52	60-3/4	24-1/2	2-1/2	2-1/2	2,450 lbs.
EVRO1000	396	950	128	52	60-3/4	24-1/2	2-1/2	2-1/2	3,160 lbs.

- Vertical round models above 90 KW at 208V, 240V, or 380V and 162 KW at 415V, 480V or 600V exceed the capacity of a single control box and may require mulitple control panels. Consult the factory for specific details and optional construction.
- Vertical square construction is available as an option for models that exceed the listed KW limits.
- Control panel heights on vertical round models may exceed tank height – consult factory for specific heights on models with inputs above 72 KW.

MODEL NUMBER	MAX. KW	GALLON CAPACITY	A	B	C	D	WATER CONNECTION		APPROX. SHIP. WEIGHT
							INLET	OUTLET	
VERTICAL SQUARE									
EVS1250	900	1,250	132-1/2	64-1/2	64-1/2	23-1/4	3	3	3,560 lbs.
EVS1500	900	1,500	128-1/2	70-1/2	70-1/2	25-1/4	3	3	4,120 lbs.
EVS2000	900	2,000	140-1/2	76-1/2	76-1/2	27-1/4"	3	3	4,350 lbs.
EVS2500	900	2,500	146-1/2	82-1/2	82-1/2	29	3	3	5,750 lbs.

MODEL NUMBER	MAX. KW	GALLON CAPACITY	A	B	C	D	WATER CONNECTION		APPROX. SHIP. WEIGHT
							INLET	OUTLET	
HORIZONTAL									
EHS0150	144	150	37	68-1/2	34-1/4	12	2	2	1,180 lbs.
EHS0200	180	200	37	78	34-1/4	12	2	2	1,370 lbs.
EHS0250	225	250	39	90-1/4	36-1/4	13	2	2	1,450 lbs.
EHS0300	270	300	45	78-1/4	42-1/4	14-3/4	2	2	1,530 lbs.
EHS0400	360	400	52	78-1/4	48-1/4	16	2	2	1,750 lbs.
EHS0500	450	500	52	90-3/4	48-1/4	16	2	2	1,860 lbs.
EHS0600	540	600	58	90-3/4	54-1/4	13-1/2	2-1/2	2	2,340 lbs.
EHS0800	720	750	58	102-1/4	54-1/4	13-/12	2-1/2	2	2,850 lbs.
EHS1000	900	1,000	58	126-1/4	54-1/4	13-1/2	2-1/2	2	3,040 lbs.
EHS1250	900	1,250	64	130-1/4	60-1/4	15	3	3	3,750 lbs.
EHS1500	900	1,500	70	126-1/4	66-1/4	16	3	3	4,340 lbs.
EHS2000	900	2,000	76	137-1/4	72-1/4	17-1/2	3	3	4,580 lbs.
EHS2500	900	2,500	82	144-1/4	78-1/4	16-1/2	3	3	6,060 lbs.

Large Volume Water Heaters

Standard kW Input and Amperage

KW INPUT	GPH @ 100° F RISE	BTU/HR EQUIVALENT	MAX. NO. OF ELEMENTS	NO. OF CONTROL STEPS	KW PER ELEMENT	NO OF CONTACTORS 240/480V	SUGGESTED MODULATING CONTROL STEP 208/240V	AMPERAGE DRAW SINGLE PHASE		THREE PHASE		
								208V	240V	208V	240V	480V
12	49	40,944	1	1	12	2/1	–	58	50	33	29	14
15	62	51,180	1	1	15	2/1	–	72	63	42	36	18
18	74	61,416	1	1	18	2/1	–	87	75	50	44	22
30	123	102,360	2	1	15	2/1	–	144	125	83	72	36
36	148	122,832	2	1	18	4/2	4/2	174	150	100	87	44
45	185	153,540	3	1	15	3/2	3/2	216	188	125	108	54
54	221	184,248	3	1	18	6/2	3/2	260	225	150	130	65
60	246	204,720	4	2	15	12/6	4/3	289	250	167	144	72
72	295	245,664	4	2	18	8/4	4/4	–	–	200	174	87
90	369	307,080	5	2	18	6/3	3/3	–	–	250	217	109
108	443	368,496	6	2	18	12/4	4/4	–	–	300	260	130
120	492	409,440	8	3	15	8/4	4/4	–	–	333	289	144
135	554	460,620	9	3	15	9/6	4/4	–	–	375	325	162
144	590	491,328	8	3	18	16/8	4/4	–	–	400	347	174
162	664	552,744	9	3	18	18/6	8/6	–	–	450	389	186
180	738	614,160	10	4	18	20/10	8/8	–	–	500	434	217
216	886	736,992	12	4	18	24/8	8/8	–	–	600	519	260
234	959	798,408	13	5	18	26/13	8/8	–	–	650	563	282
252	1,033	859,824	14	5	18	28/14	8/8	–	–	700	607	304
270	1,107	921,240	15	5	18	30/10	12/10	–	–	750	649	325
288	1,181	982,656	16	6	18	32/16	12/12	–	–	800	692	347
306	1,255	1,044,072	17	6	18	34/17	12/12	–	–	850	736	368
324	1,328	1,105,488	18	6	18	36/12	12/12	–	–	900	780	390
342	1,402	1,166,904	19	7	18	38/19	12/12	–	–	950	822	412
360	1,476	1,228,320	20	7	18	40/20	12/12	–	–	1,000	865	435
378	1,550	1,289,736	21	7	18	42/14	14/14	–	–	1,050	909	455
396	1,624	1,351,152	22	8	18	44/22	15/16	–	–	1,100	952	477
414	1,697	1,412,568	23	8	18	46/23	16/16	–	–	1,150	995	498
432	1,771	1,473,984	24	8	18	48/16	16/16	–	–	1,200	1,040	520

Recommended Specifications (for trade reference only)

Water heater(s) shall be Ruud model _____, having electrical input of _____ kW. Water heater(s) shall have a storage capacity of _____ gallons. Water heater(s) shall have the UL seal of certification and have a factory supplied CSA/ASME rated temperature and pressure relief valve. Tank(s) shall have a coating of high temperature porcelain enamel and furnished with magnesium anode rods rigidly supported. Water heater(s) shall meet or exceed the standby loss requirements of ASHRAE. Tank(s) shall have a working pressure of 125 psi, and shall be completely assembled. Water heater(s) shall be approved-listed and constructed in accordance with UL 1453. Water heater(s) shall be equipped with “screw-in” type elements featuring a stainless steel outer sheath of incoloy material. Tank shall be insulated with rigid polyurethane foam insulation. Water heater(s) shall be provided with internal power circuit fusing, control circuit fusing, magnetic contactors, 120 volt control circuit transformer and immersion thermostat(s) with manual reset high limit control. This product features a three year limited warranty against tank leaks.

ASME Construction (for trade reference only)

Water heater(s) shall be constructed in accordance with the requirements of the ASME Boiler and Pressure Vessel Code, Section IV Part HLW.

In keeping with its policy of continuous progress and product improvement, Ruud reserves the right to make changes without notice.

PRINTED IN U.S.A. 11/12 WP FORM NO. RR102CE-8R