Master Heavy Duty Ultra Low NOx Water Heaters

Master heavy duty ultra low NOx water heaters (14ng/J NOx emissions) exceed ANSI standards for flammable vapor ignition resistance

Performance

- FHR: 150-gallons for natural gas
- Recovery: 75.8 gallons at a 90° F rise

Flammable Vapor Detection System

- Protective control system that disables the heater in the presence of flammable vapors
- Maintenance free – no filter to clean

Self Diagnostic System

- Integrated system control for easy installation and service

Environmentally Friendly Burner

- Eco-friendly burner, ultra low NOx design
- Meets 14 ng/J NOx requirements

Longer Life

- Exclusive Ruudglas lining
- Patented Magnesium anode rod with resistor protects the tank from rust

High Altitude Compliant

- All models are certified for applications up to 8,500 feet above sea level

Plus…

- Brass drain valve and temperature and pressure relief valve are included
- Side water connections for space heating applications
- Standard replacement parts
- Standard 110-volt electrical connection
- Durable silcon nitride igniter – Hot Surface Ignition (HSI)

Warranty

- 10-Year limited tank and parts warranty*

*See Residential Warranty Certificate for complete information

Units meet or exceed ANSI requirements and have been tested according to D.O.E. procedures. Units meet or exceed the energy efficiency requirements of NAECA, ASHRAE standard 90, ICC Code and all state energy efficiency performance criteria.

Master Heavy Duty Ultra Low NOx

98-Gallon Capacities
75,100 Btu/h
Natural Gas

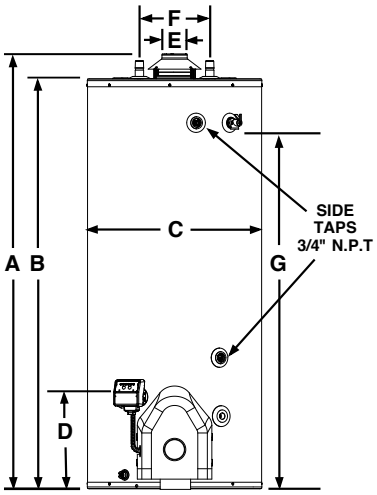

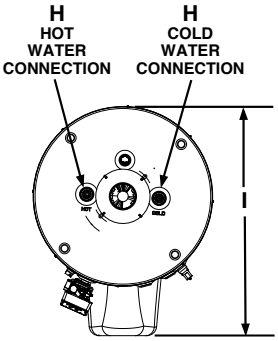

DESCRIPTION			FEATURES			ROUGHING IN DIMENSIONS (SHOWN IN INCHES)										ENERGY INFO.	
TYPE	GAL. CAP.	MODEL NUMBER	GAS INPUT IN THOUS. BTU/H NAT.	RECOVERY IN G.P.H. 90° RISE NAT.	FIRST HOUR DEL. G.P.H. NAT.	HT. TO VENT A	TANK HT. B	DIAM. C	HT. TO GAS CONN. D	VENT SIZE E	WATER CONN. CNTR. F	HT. TO SIDE T&P G	WATER CONN. H	FRONT TO BACK I	SHIP. WT. (LBS)	ENERGY FACTOR NAT.	AVG. ANN. OPER. COST NAT.
TALL	98	M100UF	75.1	75.8	150	67-7/8	64	27-1/8	14-1/4	4	11	56-1/8	1	34-3/4	370	N/A	N/A

In keeping with its policy of continuous progress and product improvement, Ruud reserves the right to make changes without notice.

PRINTED IN U.S.A. 12/12 WP FORM NO. 101R-9