Direct Vent Vertical Water Heaters

Professional Achiever™ Direct Vent Vertical gas water heaters use outside air for combustion, offer longer venting options and a coaxial vent for easy installation

Efficiency

- .59 EF
- Well insulated for reduced stand-by heat loss

Performance

- FHR: 80 gallons for 50-gallon model and up to 66 gallons for 40-gallon model
- Recovery rate is up to 36.4 gallons at a 90 degree rise

Technology

- Adjustable coaxial vent kit allows flexibility of installation and uses outside air for combustion and requires no electrical power
- Internal air tube for reduced footprint

Longer Life

- Ruud exclusive R-Tech (resistored) anode rod provides long-lasting tank protection

Guardian System™ & Sensor

- Exclusive air/fuel shut-off device
- Maintenance free – no filter to clean
- Disables the heater in the presence of flammable vapor accumulation

Combustion Shut-off System

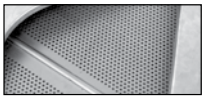

Flame Arrestor Plate

Maintenance Free

Plus…

- Enhanced flow brass drain valve
- Temperature and pressure relief valve included
- Low lead compliant
- Exclusive Ruudglas® tank lining resists corrosion and prolongs tank life
- Heat saving flue baffle design
- Gas control and combination thermostat
- Piezo ignition
- EverKleen™ patented system fights sediment build-up

Warranty

- 6-Year limited tank and parts warranty*
- With ProtectionPlus™ the 6-year limited tank warranty becomes 10-year

*See Residential Warranty Certificate for complete information

Units meet or exceed ANSI requirements and have been tested according to D.O.E. procedures. Units meet or exceed the energy efficiency requirements of NAECA, ASHRAE standard 90, ICC Code and all state energy efficiency performance criteria.

Professional Achiever
Direct Vent Vertical
40 and 50-Gallon Capacities
Up to 36,000 Btu/h
Natural and LP Gas

See dimensions chart on back.

PRINTED IN U.S.A. 09/13 WP FORM NO. PROG RUDVV

Direct Vent Vertical Water Heaters

Specifications

DESCRIPTION			FEATURES						ROUGHING IN DIMENSIONS (SHOWN IN INCHES)						ALT. RATING	ENERGY INFO.	
TYPE	GAL. CAP.	NATURAL GAS MODEL NUMBER*	GAS INPUT IN THOUS. BTU/H		RECOVERY IN G.P.H. 90° RISE		FIRST HOUR DEL. G.P.H.		DIAM. A	TANK HT. B	VENT SIZE C	HT. TO GAS CONN. D	HT. TO SIDE T&P VALVE E	SHIP. WT. (LBS)	FEET ABOVE SEA LEVEL NAT. AND LP	ENERGY FACTOR	
			NAT.	LP	NAT.	LP	NAT.	LP								NAT.	LP
Tall	40	PROG40-36N RU59 DVV	36		36.4		66		19-3/4	59-3/4	5	14-1/4	51-5/8	155	7,700	0.59	
Tall	40	PROG40-30P RU59 DVV		30		30.3		65	19-3/4	59-3/4	5	14-1/4	51-5/8	155	7,700		0.59
Tall	50	PROG50-36N RU59 DVV	36		36.4		80		21-3/4	59-1/2	5	14-1/4	52-1/2	165	7,700	0.59	
Tall	50	PROG50-32P RU59 DVV		32		32.3		80	21-3/4	59-1/2	5	14-1/4	52-1/2	165	7,700		0.59

Energy Factor based on D.O.E. (Department of Energy) test procedures.

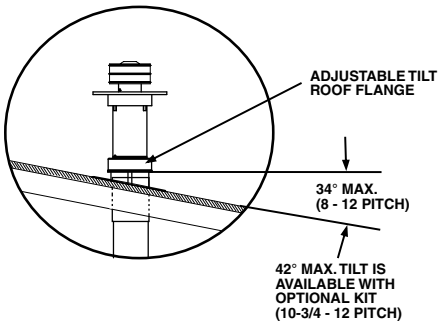

These units can only be installed with the roof jacks listed below

Co-Axial Roof Jack Sizing Table

34° MAX. (8 – 12 PITCH) ROOF JACK KIT PART NO.	42° MAX. (10-3/4 – 12 PITCH) ROOF JACK KIT PART NO.	ROOF JACK ADJUSTMENT RANGE (SEE X)
AP14363A	AP14334A	24 - 37"
AP14363B	AP14334B	33 - 68"
AP14363C	AP14334C	45 - 97"
AP14363D	AP14334D	60 - 130"
AP14363E	AP14334E	72 - 160"

Roof Jacks must be ordered separately with this direct vent water heater and installed in accordance with the instructions furnished with the heater. No other roof jack or vertical vent kit is approved for installation with this heater.

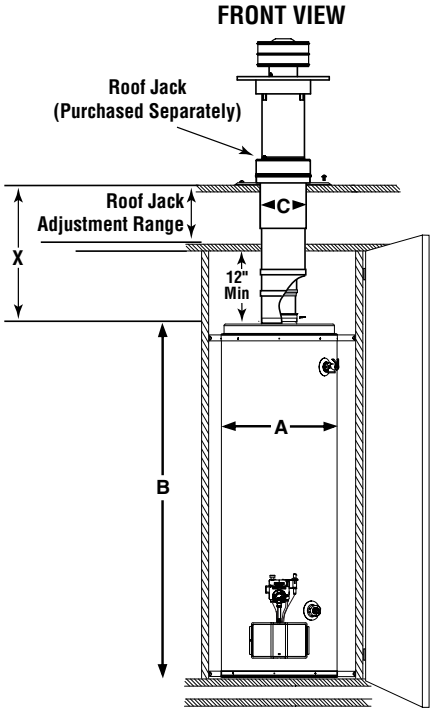

In keeping with its policy of continuous progress and product improvement, Ruud reserves the right to make changes without notice.