Ruud *Ultra* Series™ Two-Stage Downflow Gas Furnace equipped with the *Comfort Control*[2] *System*

RGLE- Series

80% A.F.U.E.†
Input Rates 75-125 kBTU

†A.F.U.E. (Annual Fuel Utilization Efficiency) calculated in accordance with Department of Energy test procedures.

- The Ruud *Ultra* Series™ *Super Quiet 80™* Two-Stage Downflow line of downflow gas furnaces is designed for installation in closets, alcoves, utility rooms, or attics. The design is certified by CSA International.
- The Comfort Control[2] System™ provides over 28 on-board diagnostics and fault history codes by detecting system and electrical problems. "Call for Service" alert notification is sent to the thermostat to alert the homeowner of required service.
- Serial Communication Enhanced – When installed with a Serial Communicating Condensing Unit and user interface control (UHC-TST550CMMS) 500 Series thermostat this unit offers 4 or 2 wire installation, auto-configuration, and diagnostic messaging with full communicating capability.
- Patented heat exchanger, constructed of aluminized steel for the maximum in corrosion resistance and thermal fatigue reliability.
- Low profile "34 inch" [864 mm] design is lighter and easier to handle, and leaves room for optional equipment.
- Energy efficient and quiet ECM 2+ communicating motor.
- Improves cooling efficiency when matched with rated condensing unit and coil.
- Constant CFM.
- Seven segment LED for system diagnostics.
- Diagnostic history for troubleshooting.
- Dip switch settings for selectable cooling airflow.
- On-demand dehumidification terminal for improved comfort in cooling mode.
- Left or right side gas and electric inlet connections.
- All models feature an integrated board with humidifier and electronic air cleaner hookups.
- Insulated blower compartment, a slow-open gas valve, specially designed draft inducer motor and blower motor make it one of the quietest furnaces on the market today.
- Pre-paint galvanized steel cabinet.
- Easy door removal and replacement.
- Molded permanent filter.
- Compatible with single or two-stage thermostat. (For optimal performance, two-stage thermostat recommended.)
- A variety of cooling coils and plenums designed to use with Ruud *Ultra* Series™ *Super Quiet 80™* Two-Stage Downflow gas furnaces are available as optional accessories.

TABLE OF CONTENTS

Standard & Optional Equipment 3
Model Features 4
Physical Data & Specifications 5
Model Number Identification 6
Dimensional Data.....7
Blower Performance Data.....8
Accessories.....9
Limited Warranty 10

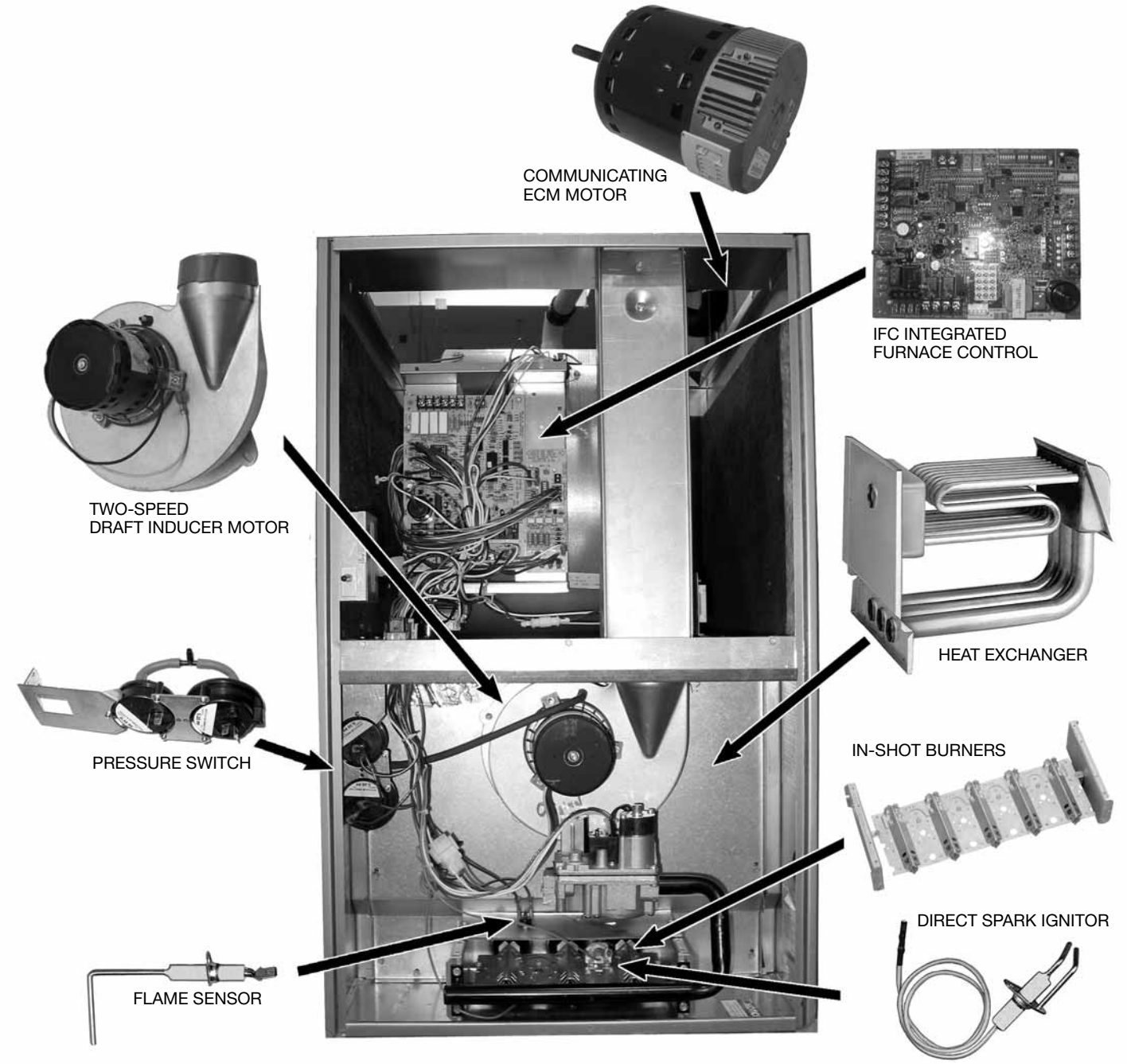

STANDARD EQUIPMENT

Completely assembled and wired; 2 speed induced draft blower; high and low pressure switches; 2 stage redundant main gas control; blower compartment door safety switch; solid state time on/time off blower control; limit control; transformer; ECM blower motor. Furnaces are equipped with cooling/heating relay and transformer (50VA) ready for air conditioning applications. (Please note: a thermostat is not included as standard equipment.) Flame sensor diagnostics; fused-protection (secondary), **3rd speed option for continuous fan.**

WARNING

THIS FURNACE IS NOT APPROVED
OR RECOMMENDED
FOR USE IN MOBILE HOMES

OPTIONAL EQUIPMENT

NOTE: Furnace is not listed for use with fuels other than natural or L.P. (propane) gas.

The complete terms of limited and other warranties are available at our sales office, or through local installer.

All models can be converted by a qualified HVAC professional or local service dealer to use L.P. (propane) gas without changing burners. Factory approved kits must be used to convert from natural to L.P. (propane) gas and may be ordered as optional accessories from a Ruud parts distributor.

For L.P. (propane) operation, refer to Conversion Kit Index Form.

NOTE: For natural and L.P. (propane) gas models, direct spark ignition is 100% lockout type.

The *Comfort Control² System*™ Features:

- **The Ruud Dual 7-Segment LED Display easily shows system operating status codes and diagnostic codes.**
- **The Status Indication System Diagnostics feature thermostat communication capability and built-in diagnostics.** The thermostat communication capability and alerts the homeowner to any necessary service requirements. Faster, more accurate service is provided by the built-in diagnostics, by providing the HVAC professional with dependable information.

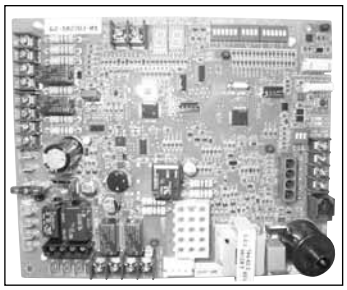

- **The fault recall feature will allow for the last six fault-codes to be displayed, and will retain these codes even if power failure occurs.**
- **In order to save time and money, replacement automotive style fuses can be utilized instead of replacing the entire control board.**

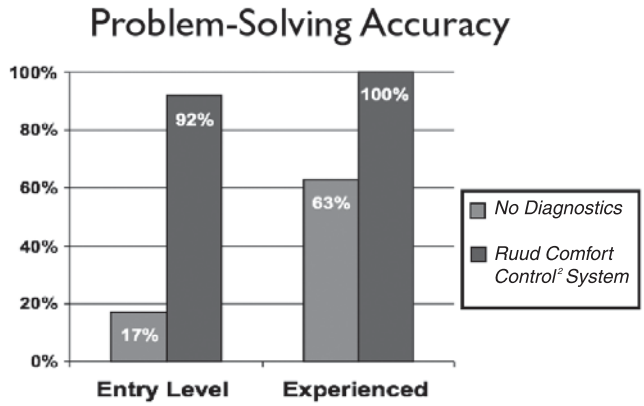

Model Features:

- The *Comfort Control² System*™ provides over 28 on-board diagnostics and fault history codes by detecting system and electrical problems. “Call for Service” alert notification is sent to the thermostat to alert the homeowner of required service.
- Serial Communication Enhanced – When installed with a Serial Communicating Condensing Unit and user interface control (UHC-TST550CMMS) 500 Series thermostat this unit offers 4 or 2 wire installation, auto-configuration, and diagnostic messaging with full communicating capability.
- Patented heat exchanger, constructed of aluminized steel for the maximum in corrosion resistance and thermal fatigue reliability.
- Low profile “34 inch” [864 mm] design is lighter and easier to handle, and leaves room for optional equipment.
- Energy efficient and quiet ECM 2+ communicating motor.
- Improves cooling efficiency when matched with rated condensing unit and coil.
- Constant CFM.
- Seven segment LED for system diagnostics.
- Diagnostic history for troubleshooting.
- Dip switch settings for selectable cooling airflow.
- On-demand dehumidification terminal for improved comfort in cooling mode.
- Left or right side gas and electric inlet connections.
- All models feature an integrated board with humidifier and electronic air cleaner hookups.
- Insulated blower compartment, a slow-open gas valve, specially designed draft inducer motor and blower motor make it one of the quietest furnaces on the market today.
- Pre-paint galvanized steel cabinet.
- Easy door removal and replacement.
- Molded permanent filter.
- Compatible with single or two-stage thermostat. (For optimal performance, two-stage thermostat recommended.)

Physical Data and Specifications—Downflow Models
U.S. and Canadian Models

MODEL NUMBERS RGLE- SERIES		07EAMKR 07NAMKR	07EBRQR 07NBRQR	10EBRMR 10NBRMR	12EARMR 12NARMR
100% High Input–BTU/Hr [kW] ②		75,000 [22]	75,000 [22]	100,000 [29]	125,000 [37]
High Heating Capacity–BTU/Hr [kW] ①		60,000 [18]	60,000 [18]	80,000 [23]	100,000 [29]
70% Low Input–BTU/Hr [kW]		52,500 [15]	52,500 [15]	70,000 [20]	87,500 [25]
Low Heating Capacity–BTU/Hr [kW]		42,000 [12]	42,000 [12]	56,000 [16]	70,000 [20]
Heating–Ext. Static Pressure [kPa]		.12 [.029]	.12 [.029]	.15 [.037]	.20 [.05]
Blower (D x W) [mm]		11 x 7 [279 x 178]	11 x 10 [279 x 254]	11 x 10 [279 x 254]	11 x 10 [279 x 254]
ECM Motor H.P. [W]		1/2 [373]	3/4 [559]	1 [746]	1 [746]
Motor Full Load Amps.		7.7	9.6	12.8	12.8
Unit Amps		8.7	12.0	12.0	12.0
Maximum Overcurrent Protection		15	15	15	15
Cooling CFM @ .5" [kPa] E.S.P. (Nominal) [L/s] (Range)		600-1200 [283]-[566]	1000-1600 [472]-[755]	1200-2000 [566]-[944]	1200-2000 [566]-[944]
Max. E.S.P. (In. W.C.) [kPa]		0.8 [0.2]	0.8 [0.2]	0.8 [0.2]	0.8 [0.2]
Temperature Rise Range °F [°C]	High Fire	30-60 [17-33]	25-55 [14-31]	30-60 [17-33]	35-65 [19.4-36.0]
	Low Fire	20-50 [11-28]	20-50 [11-28]	25-55 [14-31]	30-60 [17-33]
Max. Outlet Air Temp. °F [°C]		165 [73.9]	165 [73.9]	165 [73.9]	185 [85]
Standard Filter Size–Inches [mm]		(2) 12 x 20 [305 x 508]	(2) 14 x 20 [356 x 508]	(2) 14 x 20 [356 x 508]	(2) 14 x 20 [356 x 508]
Approx. Shipping Weight (Lbs.) [kg]		115 [52]	115 [52]	120 [54]	140 [63]
AFUE ①		80%	80%	80%	80%

① In accordance with D.O.E. test procedures.
② See Conversion Kit Index Form for high altitude derate in U.S. applications. For Canadian applications, reference the furnace installation instructions.

[ ] Designates Metric Conversions

Model Number Identification—Downflow Models

R	G	L	E	07E			A	M	K	R
Ruud	Gas Furnace	Downflow	Design Series E = Communicating	Heating Input Designation			Variations **A** = Std. Cabinet **B** = Wide Cabinet	Blower Designation **U** = 11 x 6 [279 x 152 mm] **M** = 11 x 7 [279 x 178 mm] **R** = 11 x 10 [279 x 254 mm]	Heating & Cooling Designation **K** = 600-1200 CFM [283-566 L/s] **M** = 1200-2000 CFM [566-944 L/s] **Q** = 1000-1600 CFM [566-755 L/s]	Fuel Type **R** = Natural Gas, U.S. and Canadian Standard Furnace
				Electric Ignition	NO_x Model	Input BTU/HR				
				07E	07N	75,000 [22 kW]				
				10E	10N	100,000 [29 kW]				
				12E	12N	125,000 [37 kW]				

[ ] Designates Metric Conversions

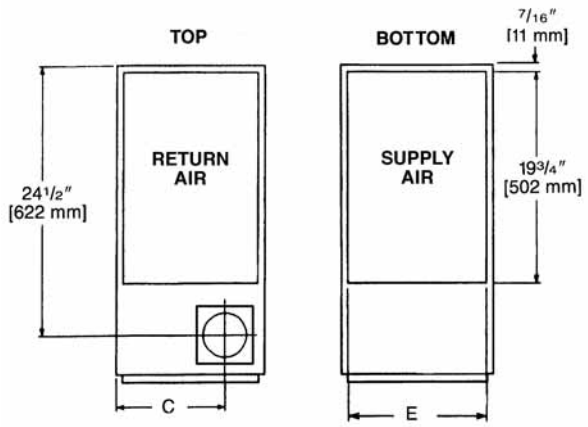

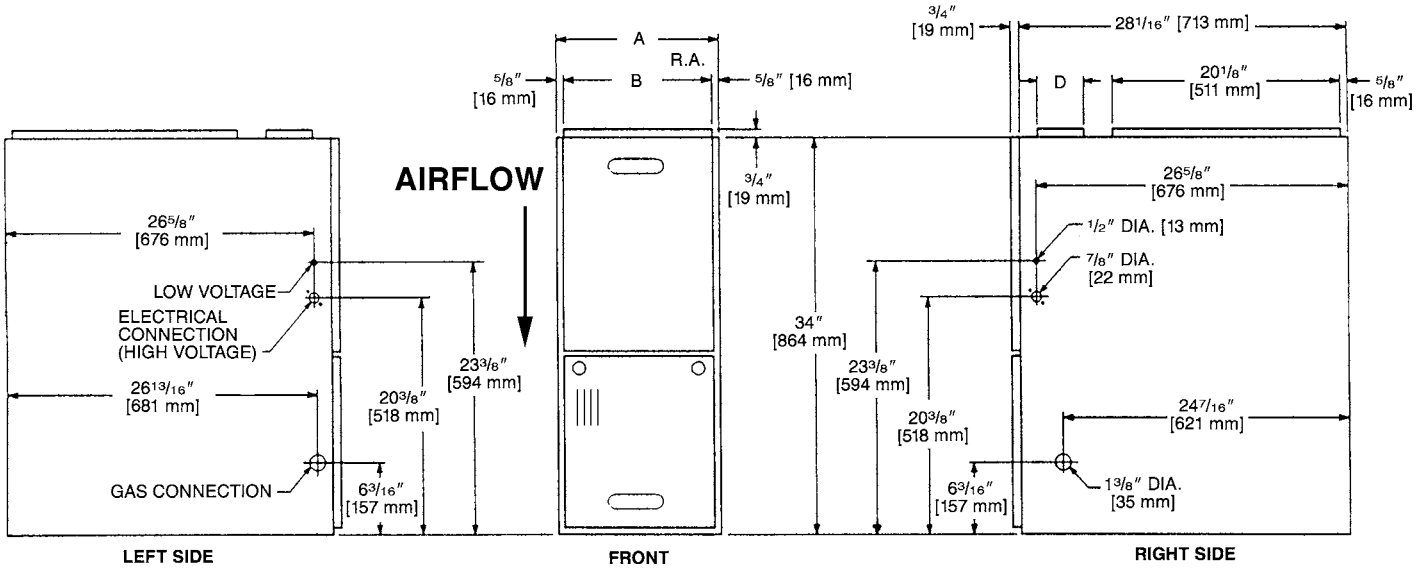

Dimensions and Clearance to Combustible Material (inches) [mm]

MODEL RGLE-SERIES	A	B	C	D	E	REDUCED CLEARANCES (IN.) [mm]						
						LEFT SIDE	RIGHT SIDE	BACK	TOP	FRONT	VENT	SHIP. WGTS. (LBS.) [kg]
07A	17 1/2 [445]	16 11/32 [415]	12 1/8 [308]	①	16 5/8 [422]	0	3 ②	0	1 [25]	3 [76]	6 [152] ③	110 [49.9]
07B	21 [533]	19 27/32 [504]	13 7/8 [352]	①	20 1/8 [511]	0	0	0	1 [25]	3 [76]	6 [152] ③	115 [52.2]
10	21 [533]	19 27/32 [504]	13 7/8 [352]	①	20 1/8 [511]	0	0	0	1 [25]	3 [76]	6 [152] ③	120 [54.4]
12	24 1/2 [622]	23 11/32 [593]	15 5/8 [397]	①	23 5/8 [600]	0	0	0	1 [25]	3 [76]	6 [152] ③	140 [63.5]

NOTES: ① May require a 3" [76 mm] to 4" [102 mm] or 3" [76 mm] to 5" [127 mm] adapter.
② May be 0" [0 mm] with type B vent.
③ May be 1" [25 mm] with type B vent.
Furnaces must be vented in accordance with the National Fuel Gas Code, ANSI Z223.1 and/or Can/CGA-B149 Installation Codes and in accordance with local codes.

[ ] Designates Metric Conversions

Blower Performance Data

MODEL RGLE-	BLOWER SIZE (D X W) INCHES [mm]	ECM MOTOR H.P. [W]	BLOWER SPEED	CFM [L/s] AIR DELIVERY EXTERNAL STATIC PRESSURE INCHES WATER COLUMN [kPa]
				.1 [.02]–.8 [.2]
07A	11 x 7 [279 x 178]	1/2 [373]	HIGH MED-HI MED LOW	1200 [566] 1000 [472] 800 [378] 600 [283]
07B	11 x 10 [279 x 254]	3/4 [559]	HIGH MED-HI MED LOW	1600 [755] 1400 [661] 1200 [566] 1000 [472]
10, 12	11 x 10 [279 x 254]	1 [746]	HIGH MED-HI MED LOW	2000 [944] 1600 [755] 1400 [661] 1200 [566]

NOTE: See Coil Specification Sheet for coil data.

[ ] Designates Metric Conversions

DOWNFLOW WARNING: Unit design is certified for installation on non-combustible floor. A special factory supplied combustible floor sub-base is required when installing on a combustible floor. Failure to install the sub-base may result in fire, property damage and personal injury.

COMBUSTIBLE FLOOR BASE DIMENSIONS

COMBUSTIBLE FLOOR BASE	USE WITH FURNACE SIZES	A IN. [mm]	B IN. [mm]	C IN. [mm]
RXGC-B17	RGLE-07EAMK	18 [457]	16 3/4 [425]	14 3/4 [451]
RXGC-B21	RGLE-07EBRQ, RGLE-10EBRM	21 1/2 [546]	20 1/4 [514]	18 1/4 [464]
RXGC-B24	RGLE-12EARMR	25 [635]	23 3/4 [603]	21 3/4 [552]

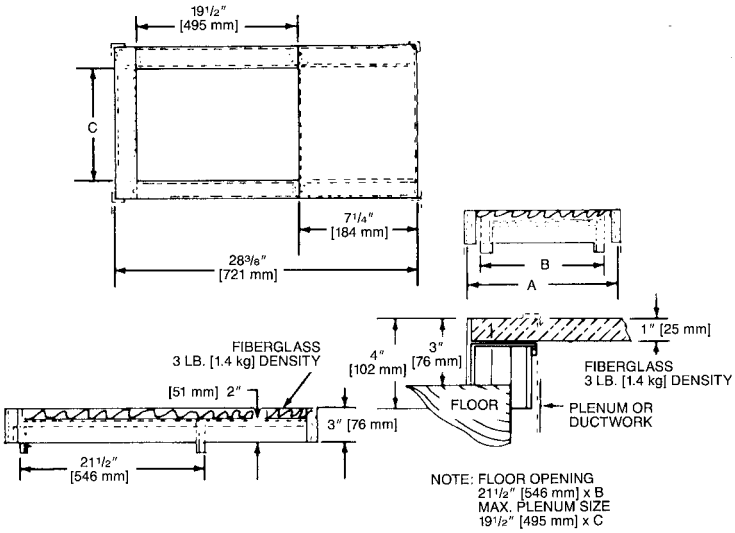

SUPPLY AIR SENSOR

(For Displaying Supply Air Temp on Communicating Systems Only).
(Do not install on non-communicating configurations).
Part #47-24255-01 or equivalent.

RXPF-F01 and F02

FOSSIL FUEL KITS—are for use with Ruud Heat Pumps and Super Quiet 80 warm air furnaces. The RXPF-F02 also meets TVA requirements.

RXGF-CC*

FILTER RACK—Downflow top return mount.
NOTE: Filter racks are shipped without filters.

*Filters available through PROSTOCK®.

[ ] Designates Metric Conversions

FOR HIGH ALTITUDES:

HIGH ALTITUDE OPTION CODE: U.S. & Canada –
None required for high altitudes.

HIGH ALTITUDE CONVERSION KITS: U.S. & Canada –
None required for high altitudes.

80+ HIGH ALTITUDE INSTRUCTIONS
Caution: Always follow National Fuel Gas Code (NFGC) guidelines when converting for high altitudes. High altitude option codes are not required for these models. However, **the burner orifice size needs to be recalculated and verified** at elevations above 2000 ft. See Installation Instructions for more information.

NOTE: For Canadian installations only, an optional derate (manifold gas pressure reduction) method may be used to adjust the furnace for altitude. See Installation Instructions for more information. This optional method may **NOT** be used for U.S. installations.

RXGW-B01 CHIMNEY ADAPTER:

See Installation Instructions for application limitations.

THERMOSTATS

RECOMMENDED COMMUNICATING THERMOSTAT
(For Communicating Configurations Only)

UHC-TST550CMMS

Contractor Benefits:
- Multi-Purpose Thermostat-Setup, Control & Diagnostics
- Auto-Configuration – No Manual Settings Required in the Field
- System History – More Accurate Diagnostics
- Easy Installation – Requires only 4 wires
- Diagnostic Messages (Service Access to Fault Codes)
- Blower Adjustment in Heat and Cool
- Programmable Fan
- USB Interface for contractor contact information and thermostat programming

Homeowner Benefits:
- Scrolling System Status
- De-Humidification Control
- Humidification Control
- Heat/Cool/Auto Change-over
- Outdoor Temperature Display
- Backlight On/Off
- Intelligent Scheduling Ramp-Up/Program Anticipation
- Audio Notifications On/Off
- Air Filter, UV Lights & Humidifier Maintenance Reminder
- Temperature Offset
- Continuous Fan (Hi, Med, Lo)

GENERAL TERMS OF LIMITED WARRANTY*

Ruud will furnish a replacement for any part of this product which fails in normal use and service within the applicable period stated, in accordance with the terms of the limited warranty.

***For complete details of the Limited and Conditional Warranties, including applicable terms and conditions, contact your local contractor or the Manufacturer for a copy of the product warranty certificate.**

Heat Exchanger .....Limited Lifetime
Parts.....Ten (10) Years

In keeping with its policy of continuous progress and product improvement, Ruud reserves the right to make changes without notice.

Ruud Heating, Cooling & Water Heating • P.O. Box 17010
Fort Smith, Arkansas 72917 • www.ruud.com

Ruud Canada • 125 Edgeware Road, Unit 1
Brampton, Ontario • L6Y 0P5

Rely on Ruud.™

PRINTED IN U.S.A 10/13 QG FORM NO. G22-513 REV. 1