RUUD

Rely on Ruud.™

SUBMITTAL COVER SHEET

PROJECT NAME _____

LOCATION _____

ARCHITECT _____

ENGINEER _____

CONTRACTOR _____

SUBMITTED BY _____ DATE _____

UNIT SUMMARY

Quantity						
Unit Designation						
Model No.						
Total Cooling						
Sensible Cooling						
Air Ent. Evaporator						
Air Lvg. Evaporator						
Heating Input						
Heating Output						
CFM/ESP						
EER/SEER						
Electrical						
Minimum Ampacity						
Min.-Max. Breaker						
Net Unit Weight						
Accessory						
Catalog Form Number						

ACCESSORIES:

NOTES:

DOWNFLOW GAS FURNACES w/ECM MOTORS:

RGLT- Series
80% A.F.U.E.†
Input Rates 75 to 125 kBTU [22 to 37 kW]

JOB NAME _____ MODEL NO. _____

CONTRACTOR _____ OUTDOOR UNIT MODEL NO. _____

ENGINEER _____ LOCATION _____

SUBMITTED FOR ☐ APPROVAL ☐ RECORD ORDER NO. _____

DATE _____

UNIT DATA

HEATING PERFORMANCE

TOTAL CAPACITY INPUT* ..... _____ MBH [kW]

TOTAL CAPACITY OUTPUT* .. _____ MBH [kW]

DESIGN TEMP. RISE ..... _____ °F [°C] DB

AFUE ..... _____ %

CALIFORNIA SEASONAL EFFICIENCY ..... _____ %

(*uses blower motor heat)

SUPPLY AIR BLOWER PERFORMANCE

TOTAL AIR SUPPLY ..... _____ CFM [L/s]

TOTAL RESISTANCE EXTERNAL TO UNIT..... _____ IWG

BLOWER SPEED ..... _____ RPM

POWER OUTPUT REQUIREMENT .. _____ BHP

MOTOR RATING ..... _____ HP [W]

POWER INPUT REQUIREMENT..... _____ kW

ELECTRICAL DATA

POWER SUPPLY..... _____ Hz

TOTAL UNIT AMPACITY..... _____ AMPS

MINIMUM WIRE SIZE ..... _____ AWG

MAXIMUM OVERCURRENT DEVICE FUSES/HACR BREAKER ..... _____ AMPS

CLEARANCES

FRONT SIDE	3" [76.2 mm]
RIGHT SIDE	3" [76.2 mm]
LEFT SIDE	0" [0 mm]
TOP	1" [25.4 mm]

FEATURES FOR RGLT-

- Innovative design results in reliable, efficient operation at sound levels which provide distinct competitive advantage.
- Patented heat exchanger, constructed of aluminized steel for the maximum in corrosion resistance and thermal fatigue reliability.
- Low profile “34 inch” [864 mm] design is lighter and easier to handle, and leaves room for optional equipment.
- Left or right side gas and electric inlet connections with quick, simple change.
- Direct Spark ignition.
- Integrated board with humidifier and electronic air cleaner hookups.
- Insulated blower compartment helps to reduce jacket loss and noise.
- Pre-paint galvanized steel cabinet.
- Molded permanent filter.
- Grab-holes in doors to aid in easy door removal and replacement.
- ECM X-13 Blower Motor.

A variety of cooling coils and plenums designed to use with *Super Quiet 80™* gas furnaces are available as optional accessories.

†A.F.U.E. (Annual Fuel Utilization Efficiency) calculated in accordance with Department of Energy test procedures.

FIELD INSTALLED ACCESSORIES

Fossil Fuel Kit (RXPF-F01 and F02) ..... ☐

Filter Rack (RXGF-CC*)..... ☐

*Filters available through PROSTOCK®

Combustible Floor Base (RXGC-B14, 17, 21, 24) ..... ☐

DOWNFLOW MODELS

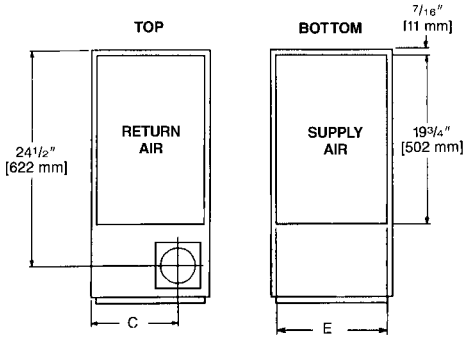

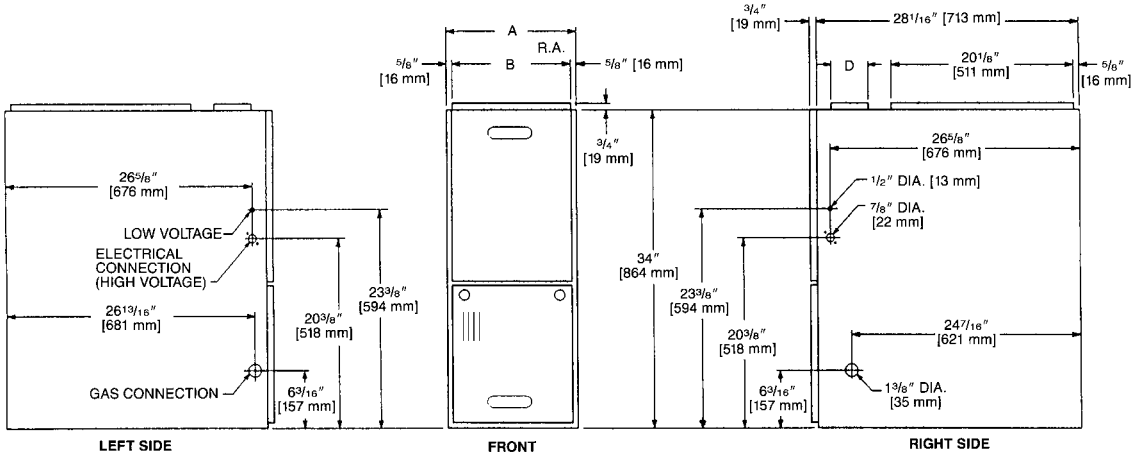

DIMENSIONS AND CLEARANCE TO COMBUSTIBLE MATERIAL (INCHES) [mm]

MODEL RGLT-SERIES	A	B	C	D	E	REDUCED CLEARANCES (IN.) [mm]						
						LEFT SIDE	RIGHT SIDE	BACK	TOP	FRONT	VENT	SHIP. WGTS. (LBS.) [kg]
07 (A)	17 1/2 [445]	16 11/32 [415]	12 1/8 [308]	①	16 5/8 [422]	0	3 ②	0	1 [25]	3 [76]	6 [152] ③	105 [47.6]
07 (B)	21 [533]	19 27/32 [504]	13 7/8 [352]	①	20 1/8 [511]	0	0	0	1 [25]	3 [76]	6 [152] ③	120 [54.4]
10	21 [533]	19 27/32 [504]	13 7/8 [352]	①	20 1/8 [511]	0	0	0	1 [25]	3 [76]	6 [152] ③	120 [54.4]
12	24 1/2 [622]	23 11/32 [593]	15 5/8 [397]	①	23 5/8 [600]	0	0	0	1 [25]	3 [76]	6 [152] ③	140 [63.5]

NOTES: ① May require a 3" [76 mm] to 4" [102 mm] or 3" [76 mm] to 5" [127 mm] adapter.
② May be 0" [0 mm] with type B vent.
③ May be 1" [25 mm] with type B vent.
Furnaces must be vented in accordance with the National Fuel Gas Code, ANSI Z223.1 and/or Can/CGA-B149 Installation Codes and in accordance with local codes.

[ ] Designates Metric Conversions

DOWNFLOW WARNING: Unit design is certified for installation on non-combustible floor. A special factory supplied combustible floor sub-base is required when installing on a combustible floor. Failure to install the sub-base may result in fire, property damage and personal injury.

COMBUSTIBLE FLOOR BASE DIMENSIONS

COMBUSTIBLE FLOOR BASE	USE WITH FURNACE SIZES	A IN. [mm]	B IN. [mm]	C IN. [mm]
RXGC-B14	(-)GLT- 05	14 1/2 [368]	13 1/4 [337]	11 1/4 [286]
RXGC-B17	(-)GLT-07, (-)GLT-10(-)A	18 [457]	16 3/4 [425]	14 3/4 [451]
RXGC-B21	(-)GLT-10(-)B	21 1/2 [546]	20 1/4 [514]	18 1/4 [464]
RXGC-B24	(-)GLT-12, (-)GLT-15	25 [635]	23 3/4 [603]	21 3/4 [552]

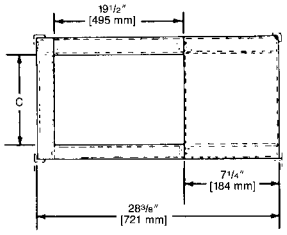

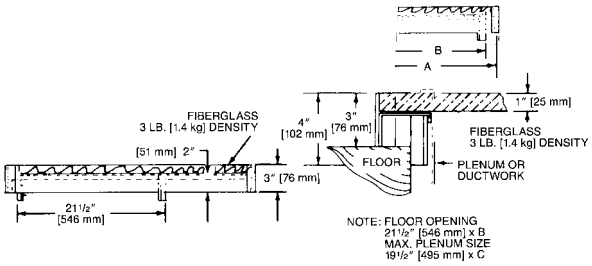

Before proceeding with installation, refer to installation instructions packaged with each model, as well as complying with all Federal, State, Provincial, and Local codes, regulations, and practices.

Rheem Sales Company, Inc.
P.O. Box 17010, Fort Smith, AR 72917

"In keeping with its policy of continuous progress and product improvement, Rheem reserves the right to make changes without notice."

PRINTED IN U.S.A. 10-13 QG FORM NO. X33-1387 REV. 1