SUBMITTAL COVER SHEET

PROJECT NAME _____

LOCATION _____

ARCHITECT _____

ENGINEER _____

CONTRACTOR _____

SUBMITTED BY _____ DATE _____

UNIT SUMMARY

Quantity						
Unit Designation						
Model No.						
Total Cooling						
Sensible Cooling						
Air Ent. Evaporator						
Air Lvg. Evaporator						
Heating Input						
Heating Output						
CFM/ESP						
EER/SEER						
Electrical						
Minimum Ampacity						
Min.-Max. Breaker						
Net Unit Weight						
Accessory						
Catalog Form Number						

ACCESSORIES:

NOTES:

SUBMITTAL SHEET FOR RGTC 95% A.F.U.E. DOWNFLOW/ HORIZONTAL GAS FURNACES

Models with Input Rates from 45,000 to 105,000 BTU/HR [13.19 to 30.77 kW]

QUALIFIES FOR FEDERAL TAX CREDIT

"Visit www.Rheem.com for complete details."

JOB NAME _____ MODEL NO. _____

CONTRACTOR _____ OUTDOOR UNIT MODEL NO. _____

ENGINEER _____ LOCATION _____

SUBMITTED FOR ☐ APPROVAL ☐ RECORD ORDER NO. _____

DATE _____

UNIT DATA

HEATING PERFORMANCE

TOTAL CAPACITY INPUT* ..... _____ MBH [kW]

TOTAL CAPACITY OUTPUT* .. _____ MBH [kW]

DESIGN TEMP. RISE ..... _____ °F [°C] DB

AFUE ..... _____ %

CALIFORNIA SEASONAL EFFICIENCY ..... _____ %

(*uses blower motor heat)

SUPPLY AIR BLOWER PERFORMANCE

TOTAL AIR SUPPLY ..... _____ CFM [L/s]

TOTAL RESISTANCE EXTERNAL TO UNIT..... _____ IWG

BLOWER SPEED ..... _____ RPM

POWER OUTPUT REQUIREMENT .. _____ BHP

MOTOR RATING ..... _____ HP [W]

POWER INPUT REQUIREMENT..... _____ kW

ELECTRICAL DATA

POWER SUPPLY..... _____ Hz

TOTAL UNIT AMPACITY..... _____ AMPS

MINIMUM WIRE SIZE ..... _____ AWG

MAXIMUM OVERCURRENT DEVICE FUSES/HACR BREAKER ..... _____ AMPS

FEATURES FOR RGTC

- Heat exchanger is constructed of all stainless steel for maximum corrosion resistance and thermal fatigue reliability.
- Low profile "34 inch" design is lighter and easier to handle and leaves room for optional accessories.
- Top electrical connections, left or right gas and condensate drainage connections on downflow models.
- Condensate drain for horizontal application provided standard.
- Integrated control board manages all operational functions and provides hookups for humidifier and electronic air cleaner.
- An insulated blower compartment, a slow-opening gas valve and a specially designed inducer system make it one of the quietest furnaces on the market today.
- Pre-paint galvanized steel cabinet.
- Molded permanent filters.
- Optional indoor or outdoor combustion air.
- Transformer and control fuse protection.
- Control board diagnostics.

FIELD INSTALLED ACCESSORIES

Plenum Adapter (RXAA-) ..... ☐

Vent Termination Kits Concentric:

Horizontal/Vertical = RXGY-E03A ..... ☐

Horizontal Two Pipe: RXGY-D02A, D03A (Canadian Installations) ..... ☐

RXGY-G02 (US Only) ..... ☐

Condensate Pump Kit: RXGY-B01 ..... ☐

Neutralizer Kit: RXGY-A01 ..... ☐

Fossil Fuel Kit: RXPF-F01 and F02 ..... ☐

Combustible Floor Base: RXGC-B17, B21 and B24 ..... ☐

External Top Mount Filter Rack: RXGF-CC ..... ☐

Drain Kit for Converting to Left Drain: (RXGY-H01) ..... ☐

ENERGY STAR

ISO 9001:2008
Certificate Number: 30064

member gama

DOWNFLOW MODELS

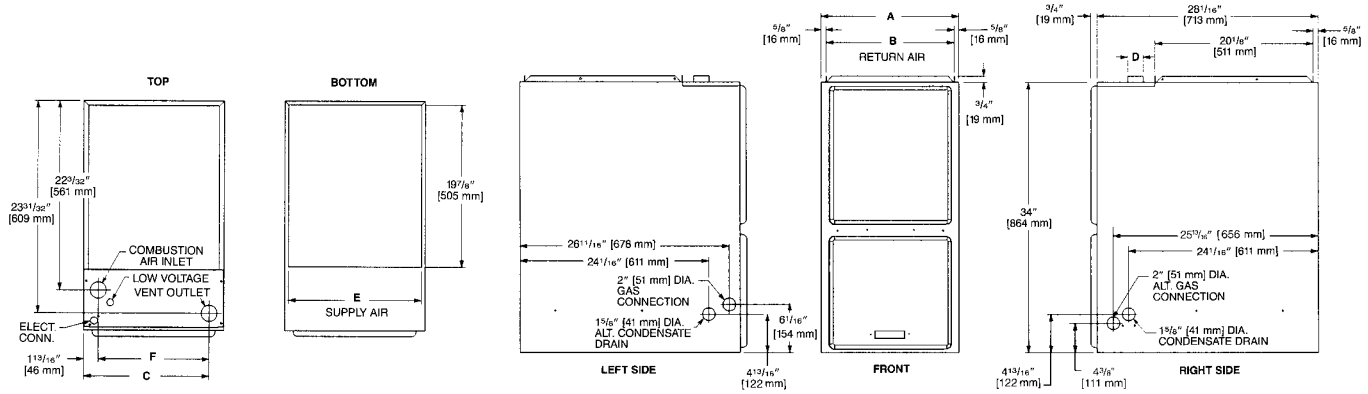

HORIZONTAL MODELS

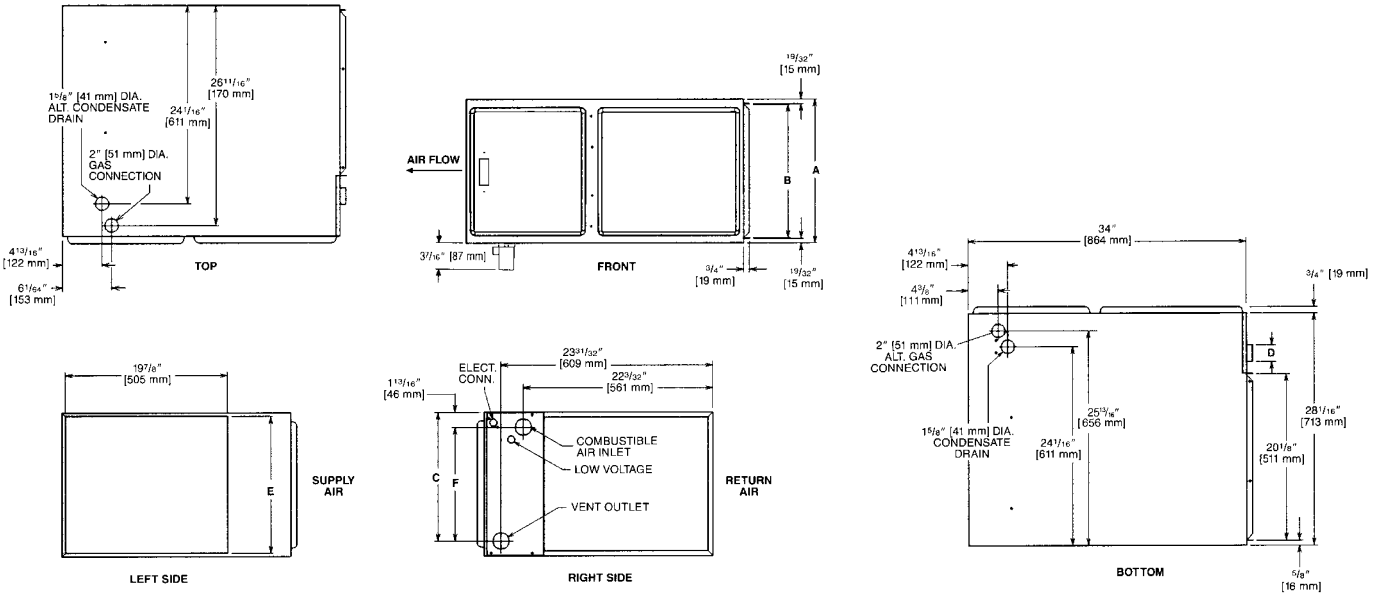

MODEL RGTC-	A	B	C	D	E	F	LEFT SIDE	MINIMUM CLEARANCE (IN.) [mm]					SHIP WGTS. [kg]
								RIGHT SIDE	BACK	TOP	FRONT	VENT	
04	17 1/2 [445]	16 11/32 [415]	15 5/8 [397]	2 [51]	16 5/8 [422]	13 7/8 [352]	0	0	0	1 [25]	2 [51]	0	123 [56]
06	17 1/2 [445]	16 11/32 [415]	15 5/8 [397]	2 [51]	16 5/8 [422]	13 7/8 [352]	0	0	0	1 [25]	2 [51]	0	126 [57]
07	21 [533]	19 27/32 [504]	19 3/16 [486]	2 [51]	20 1/8 [511]	17 3/8 [441]	0	0	0	1 [25]	2 [51]	0	137 [62]
09	21 [533]	19 27/32 [504]	19 3/16 [486]	2 [51]	20 1/8 [511]	17 3/8 [441]	0	0	0	1 [25]	2 [51]	0	148 [67]
10	24 1/2 [622]	23 11/32 [593]	22 5/8 [575]	2 [51]	23 5/8 [600]	20 7/8 [530]	0	0	0	1 [25]	2 [51]	0	160 [73]

[ ] Designates Metric Conversions

IMPORTANT NOTE: Horizontal furnace may be installed for horizontal left hand air supply ONLY. The condensate trap provided for horizontal application must be installed in the field beneath the unit as directed in the furnace Installation & Operating Instructions.

Before proceeding with installation, refer to installation instructions packaged with each model, as well as complying with all Federal, State, Provincial, and Local codes, regulations, and practices.

Rheem Sales Company, Inc.
P.O. Box 17010, Fort Smith, AR 72917

"In keeping with its policy of continuous progress and product improvement, Manufacturer reserves the right to make changes without notice."

PRINTED IN U.S.A. 2-11 DC

FORM NO. X33-1284 REV. 2
Supersedes Form No. X33-1284 Rev. 1