Ruud High Efficiency Air Handler

RHKL- Series

ECM Motor
Efficiencies up to 16 SEER

- Includes an energy efficient ECM® Motor, which in most applications, enhances the SEER rating of the outdoor unit. It also slowly ramps its speed up for quiet operation and enhanced customer satisfaction.
- Versatile 4-way convertible design for upflow, downflow, horizontal left and horizontal right applications.
- Nominal airflow up to 1.0" external static pressure.
- Factory-installed high efficiency indoor coil.
- Sturdy cabinet construction with 1.0 inch [25.4 mm] of foil faced insulation for excellent sound and insulating characteristics.
- Field-installed auxiliary electric heater kits provide exact heat for indoor comfort. Kits include circuit breakers which meet U.L. and cUL requirements for service disconnect.
- Dip switch settings for selectable, customized cooling airflow over a wide variety of applications.
- On-demand dehumidification terminal that adjusts airflow to help control humidity for unsurpassed comfort in cooling mode.
- External filter required.

TABLE OF CONTENTS

Engineering Features 3
Model Number Identification 4
Dimensional Data.....5
Airflow Directional Data 6
Airflow Performance Data 7-8
Electrical Data 9-10
Electrical Wiring 11
Accessories 11
Limited Warranty 12

Engineering Features

RHKL- Series

- Quiet, efficient ECM motor technology providing nominal airflow up to 1.0 inch [25 kPa] of external static pressure.
- Interface board with dip switches conveniently located in the blower compartment allows for precise, field selectable airflow to meet the requirements of particular applications.
- Selectable continuous fan “on” options.
- The most compact unit design available.
- Attractive pre-painted cabinet exterior.
- Rugged steel cabinet construction, designed for added strength and versatility.
- 1.0" foil faced insulation mechanically retained in blower compartment.
- Four leg rubber insulated motor mount.
- Field-installed auxiliary heater kit includes circuit breakers that meet UL and cUL requirements as a service disconnect switch.
- Blower housing with integrated controls, motor and blower. Slide out design for service and maintenance convenience.
- Field convertible for vertical upflow, vertical downflow, horizontal left hand or right hand air supply.
- Combustible floor base accessory available when required for downflow installations on combustible floors.
- Indoor coil design provides low air side pressure drop, high performance and extremely compact size. All coils come with PVC condensate elbow standard.
- Coils are constructed of aluminum fins bonded to internally grooved copper tubing.
- Molded polymer corrosion resistant condensate drain pan is provided on all indoor coils.
- Supply duct flanges provided as standard on air handler cabinet.
- Provisions for field electrical connections available from either side or top of the air handler cabinet.
- Connection point for high voltage wiring is inside the air handler cabinet. Low voltage connection is made on the outside of the air handler cabinet.
- Concentric knockouts are provided for power connection to cabinet. Installer may pull desired hole size up to 2 inches [51 mm] for 1 1/2 inch [38 mm] conduit.
- Internal checked TX valves are used on the Heat Pump indoor coil for more quiet refrigerant metering.
- Front refrigerant and drain connections.

[ ] Designates Metric Conversions

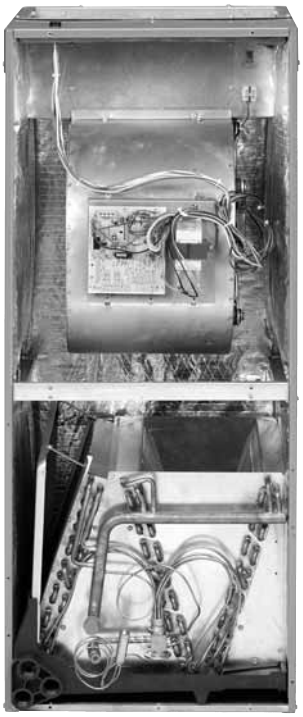

Model Number Identification

R H K L – HM 24 17 J A

Design Variation
A = 1st Design

Voltage
J = 208/240/1/60

Cabinet Size
17 = 17.5" [431.8 mm] (600-1200 CFM)
21 = 21" [533.4 mm] (1400-1600 CFM)
24 = 24.5" [609.6 mm] (1600-1800 CFM)

Capacity
24 = 18,000/24,000 BTUH [5.27 to 7.03 kW]
36 = 30,000/36,000 BTUH [8.79 to 10.55 kW]
38 = 30,000/36,000/42,000 BTUH [8.79 to 12.31 kW]
48 = 42,000/48,000 BTUH [12.31 to 14.06 kW]
60 = 60,000 BTUH [17.58 kW]

HM = A/C or HP, Multi-Position
(Upflow & Horizontal Left is the factory configuration)

Refrigerant
L = R-410A

K = Premium

Classification
H = Air Handler

Ruud

[ ] Designates Metric Conversions

AVAILABLE MODELS
R-410A MODELS
RHKL-HM2417JA
RHKL-HM3617JA
RHKL-HM3821JA
RHKL-HM4821JA
RHKL-HM4824JA
RHKL-HM6024JA

Unit Dimensions

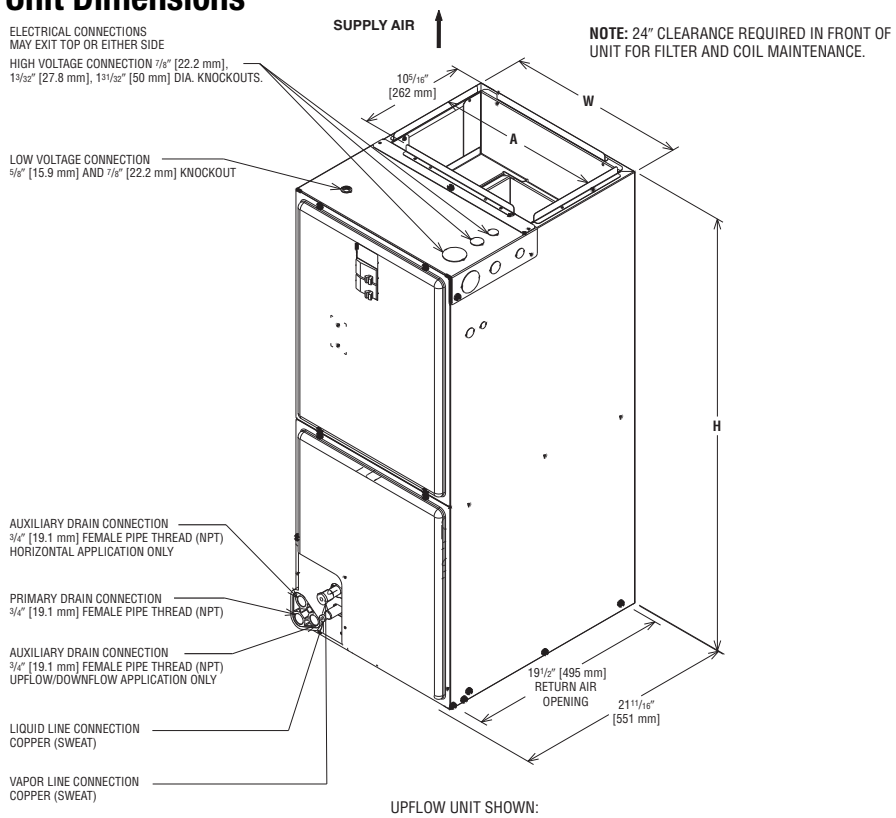

UPFLOW UNIT SHOWN:
UNIT MAY BE INSTALLED UPFLOW, DOWNFLOW, HORIZONTAL RIGHT OR LEFT AIR SUPPLY.

Return Air Opening Dimensions

Model Cabinet Size	Return Air Opening Width (Inches)	Return Air Opening Depth/Length (Inches)
17	15 7/8	19 3/4
21	19 3/8	19 3/4
24	22 7/8	19 3/4

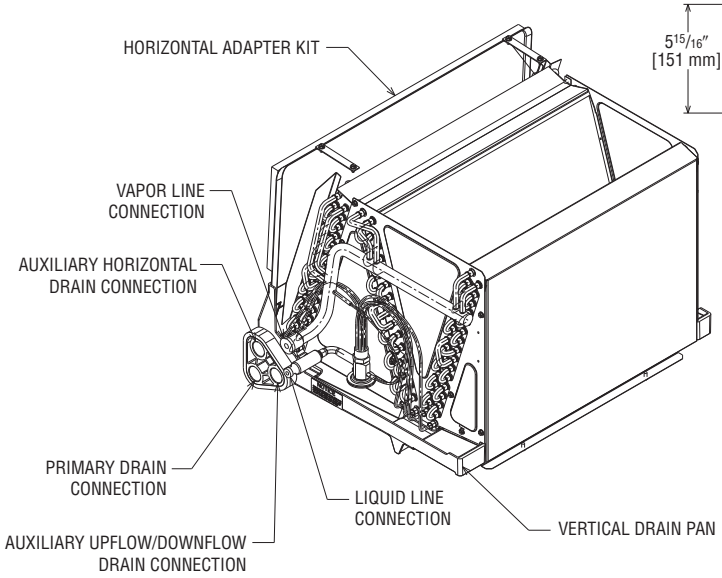

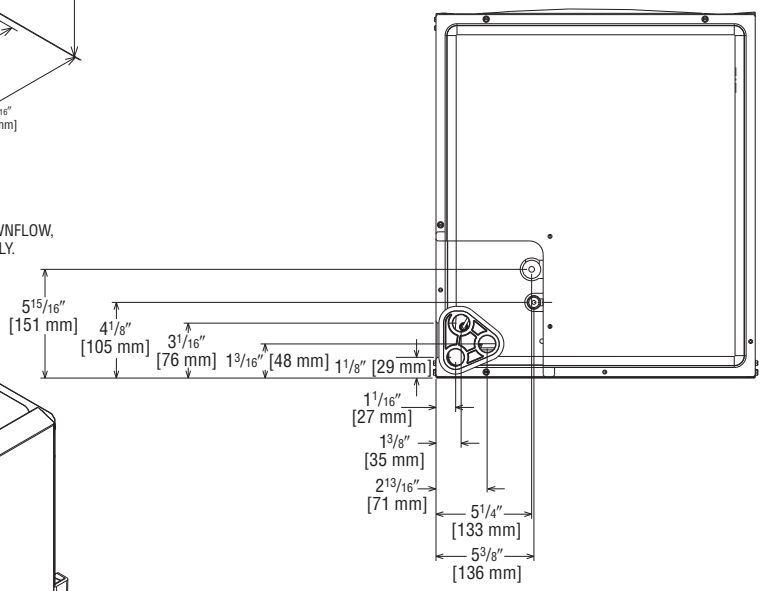

UPFLOW UNIT SHOWN:
UNIT MAY BE INSTALLED UPFLOW, DOWNFLOW, HORIZONTAL RIGHT OR LEFT AIR SUPPLY.

[ ] Designates Metric Conversions

( ) Designates Unit with Double Coil Cabinet

Unit Dimensions & Weights

Model Size RHKL	Refrigerant Connections Sweat (In.) [mm] ID		Unit Width "W" In. [mm]	Unit Height "H" In. [mm]	Supply Duct "A" In. [mm]	Air Flow CFM (Nom.) [L/s]		Unit Weight/Shipping Weight (Lbs.) [kg]
	Liquid	Vapor				Lo	Hi	Unit With Coil (Max. KW)
2417	3/8 [9.53]	3/4 [19.05]	17 1/2 [445]	42 1/2 [1080]	16 [406]	600 [283]	800 [378]	82/96 [37/44]
3617	3/8 [9.53]	3/4 [19.05]	17 1/2 [445]	42 1/2 [1080]	16 [406]	1000 [472]	1200 [566]	92/106 [37/48]
3821	3/8 [9.53]	7/8 [22.23]	21 [533]	50 1/2 [1282]	19 1/2 [495]	1000 [472]	1200 [566]	150/166 [68/75]
4821	3/8 [9.53]	7/8 [22.23]	21 [533]	50 1/2 [1282]	19 1/2 [495]	1400 [661]	1600 [755]	150/166 [68/75]
4824	3/8 [9.53]	7/8 [22.23]	24 1/2 [622]	50 1/2 [1282]	23 [584]	1600 [755]	—	162/180 [73/81]
6024	3/8 [9.53]	7/8 [22.23]	24 1/2 [622]	55 1/2 [1410]	23 [584]	—	1800 [850]	181/198 [82/90]

*Maximum dehumidification airflow.

Airflow Directional Data

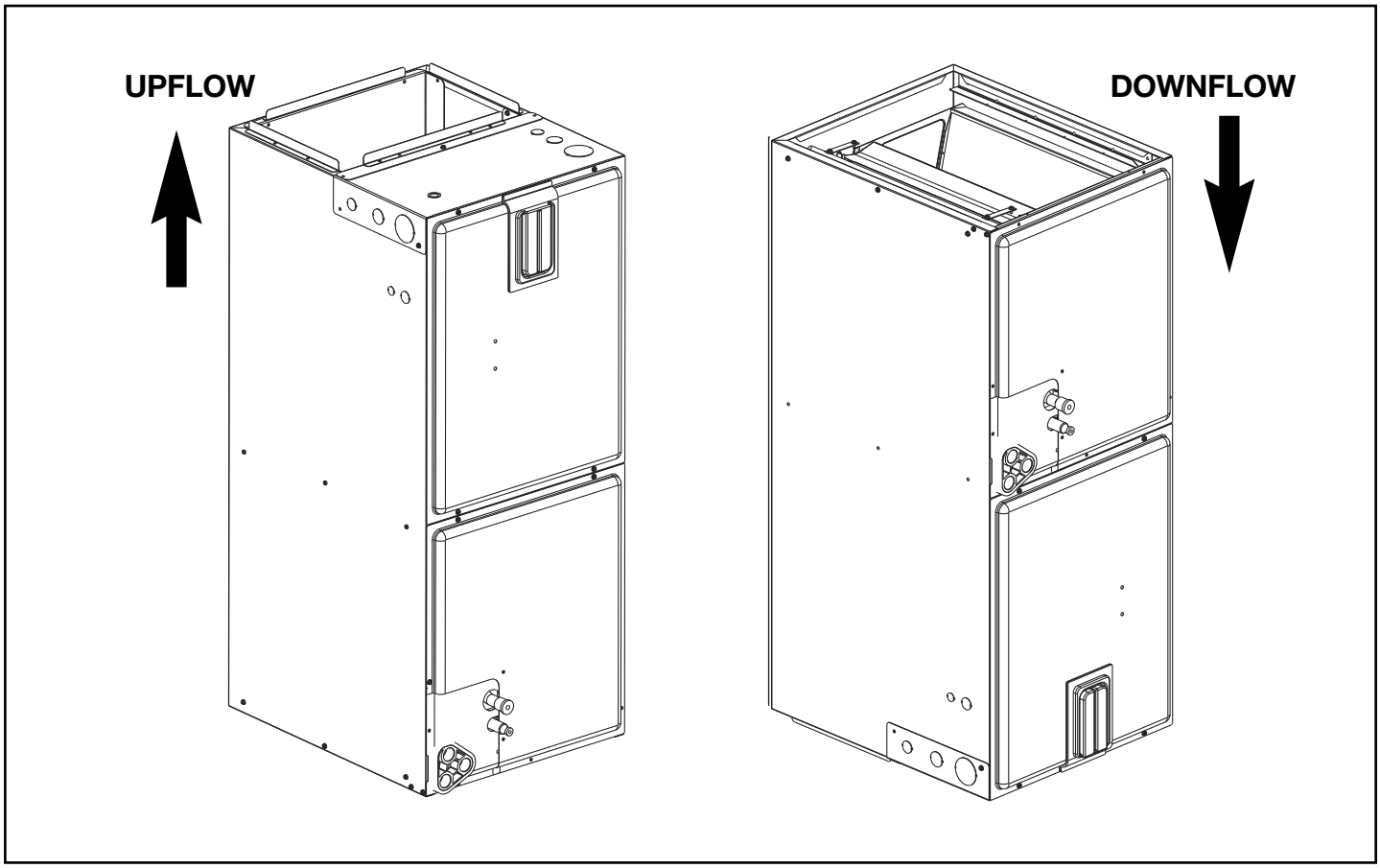

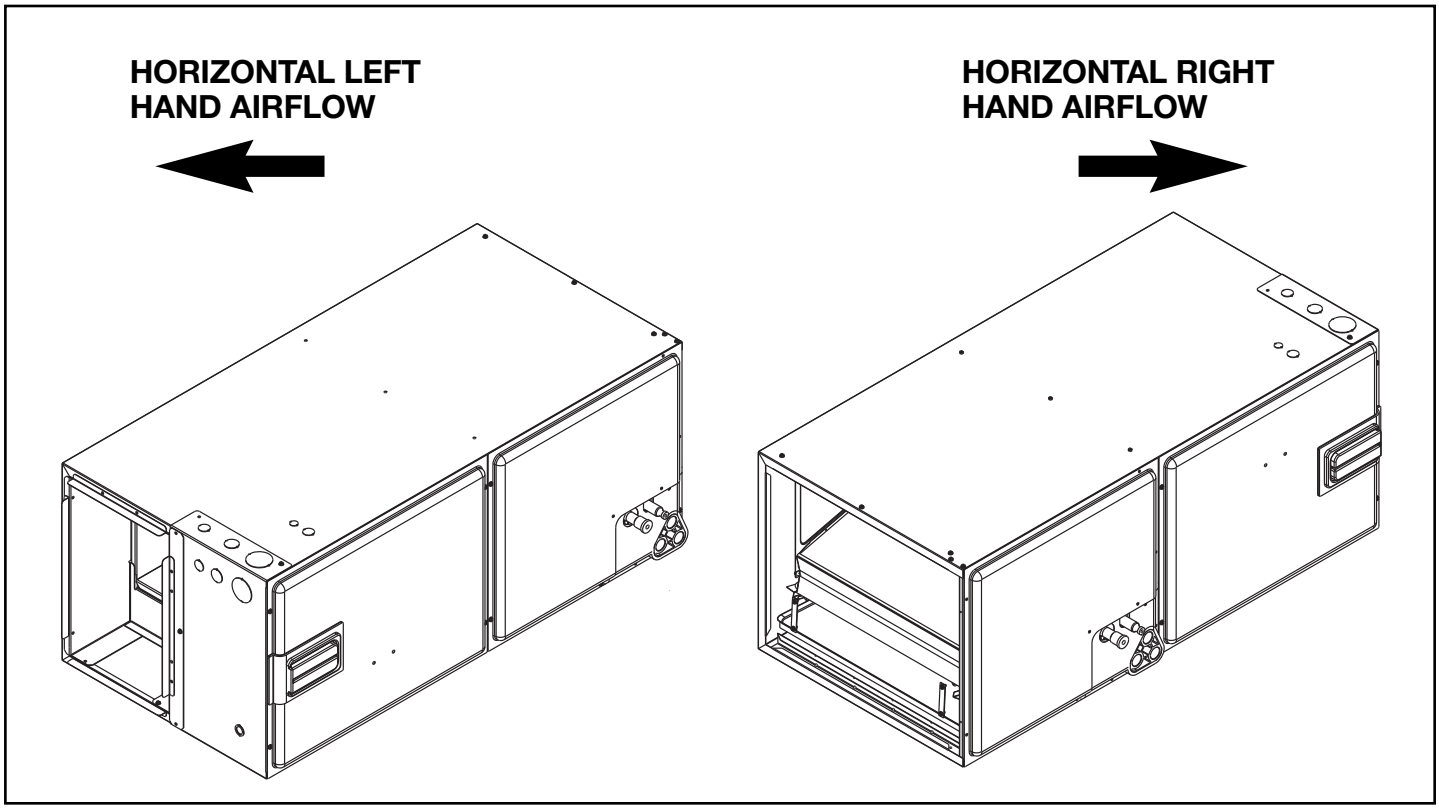

Airflow Performance

Airflow performance data is based on cooling performance with a coil and no filter in place. Select performance table for appropriate unit size, voltage and number of electric heaters to be used. Make sure external static applied to unit allows operation within the minimum and maximum limits shown in table below for both cooling and electric heat operation. For optimum blower performance, operate the unit in the .3 [8 mm] to .7 inches [18 mm] W.C. external static range. Units with coils should be applied with a minimum of .1 inch [3 mm] W.C. external static range.

Airflow Performance and Electrical Data

Model No. RHKL	Tonnage Application	Motor Speed From Factory	Nominal Air-Flow CFM	Blower Size/ Motor HP [W]		ECM CFM Air Delivery/RPM/Watts—230 Volts External Static Pressure—Inches W.C. [kPa]									
						0.1 [.02]	0.2 [.05]	0.3 [.07]	0.4 [.10]	0.5 [.12]	0.6 [.15]	0.7 [.17]	0.8 [.20]	0.9 [.22]	1.0 [.24]
2417 No Heater	1.5 Ton	High	600*	10x6 1/3 [249]	CFM [L/s]	613 [289]	613 [289]	656 [310]	656 [310]	658 [311]	656 [310]	656 [310]	653 [308]	651 [307]	647 [305]
					RPM	525	626	728	778	823	871	935	987	1025	1079
					Watts	56	68	95	120	138	152	168	191	202	222
2417 with 13 kW Heat	1.5 Ton	High	600*	10x6 1/3 [249]	CFM [L/s]	604 [285]	603 [285]	645 [304]	644 [304]	645 [304]	642 [303]	641 [303]	637 [301]	634 [299]	629 [297]
					RPM	535	641	748	803	853	906	975	1032	1075	1134
					Watts	61	75	104	131	151	167	185	210	223	245
2417 No Heat	2.0 Ton	High	800*	10x6 1/3 [249]	CFM [L/s]	832 [393]	832 [393]	835 [394]	849 [401]	851 [402]	852 [402]	861 [406]	862 [407]	862 [407]	862 [407]
					RPM	649	718	775	835	886	947	999	1043	1080	1131
					Watts	114	132	157	183	202	232	263	290	306	339
2417 with 13 kW Heat	2.0 Ton	High	800*	10x6 1/3 [249]	CFM [L/s]	814 [384]	814 [384]	817 [386]	831 [392]	833 [393]	834 [394]	843 [398]	844 [398]	844 [398]	844 [398]
					RPM	666	771	828	888	939	1000	1052	1096	1133	1185
					Watts	131	151	177	205	226	257	290	319	336	371
3617 No Heat	2.5 Ton	High	1000*	10x8 1/2 [373]	CFM [L/s]	1001 [472]	1030 [486]	1030 [486]	1035 [488]	1035 [488]	1029 [486]	1029 [486]	1029 [486]	1029 [486]	1023 [483]
					RPM	652	752	812	845	923	945	1007	1065	1090	1118
					Watts	134	166	193	212	244	266	280	320	341	357
3617 with 18 kW Heat	2.5 Ton	High	1000*	10x8 1/2 [373]	CFM [L/s]	980 [463]	1009 [476]	1009 [476]	1014 [479]	1014 [479]	1008 [476]	1008 [476]	1008 [476]	1008 [476]	1002 [473]
					RPM	714	814	874	907	985	1007	1069	1127	1152	1180
					Watts	176	208	235	254	286	308	322	362	383	399
3617 No Heat	3.0 Ton	High	1200*	10x8 1/2 [373]	CFM [L/s]	1220 [576]	1229 [580]	1229 [580]	1229 [580]	1229 [580]	1229 [580]	1238 [584]	1238 [584]	1233 [582]	1228 [580]
					RPM	732	831	875	930	981	1005	1077	1108	1156	1194
					Watts	215	253	282	314	348	362	409	426	472	496
3617 with 18 kW Heat	3.0 Ton	High	1200*	10x8 1/2 [373]	CFM [L/s]	1199 [566]	1208 [570]	1208 [570]	1208 [570]	1208 [570]	1208 [570]	1217 [574]	1217 [574]	1212 [572]	1207 [570]
					RPM	794	893	937	992	1043	1067	1139	1170	1218	1256
					Watts	257	295	324	356	390	404	451	468	514	538
3821 No Heat	2.5 Ton	High	1000*	10x10 3/4 [559]	CFM [L/s]	1000 [472]	1001 [472]	1011 [477]	1009 [476]	1005 [474]	1000 [472]	996 [470]	994 [496]	970 [458]	967 [456]
					RPM	593	650	737	801	867	914	980	1026	1058	1099
					Watts	103	124	155	177	207	224	258	287	301	323
3821 with 15 kW Heat	2.5 Ton	High	1000*	10x10 3/4 [559]	CFM [L/s]	984 [464]	979 [462]	984 [464]	976 [461]	967 [456]	956 [451]	947 [447]	939 [443]	910 [429]	901 [425]
					RPM	627	689	780	849	919	971	1041	1092	1128	1174
					Watts	124	151	187	215	250	273	312	347	366	394
3821 No Heat	3.0 Ton	High	1200*	10x10 3/4 [559]	CFM [L/s]	1175 [555]	1200 [566]	1203 [568]	1200 [566]	1200 [566]	1199 [566]	1202 [567]	1200 [566]	1197 [565]	1180 [557]
					RPM	646	740	783	851	911	958	1013	1056	1102	1144
					Watts	147	186	207	240	270	296	334	356	385	416
3821 with 18 kW Heat	3.0 Ton	High	1200*	10x10 3/4 [559]	CFM [L/s]	1159 [546]	1178 [556]	1176 [555]	1167 [551]	1162 [548]	1155 [545]	1153 [544]	1145 [540]	1137 [537]	1114 [526]
					RPM	680	779	826	899	963	1015	1074	1122	1172	1219
					Watts	168	213	239	278	313	345	388	416	450	487

WARNING: Observe airflow operating limits. Do not operate above 1.0 in. W.C. system external static.
***The airflow for continuous fan is set at 50% of the cooling airflow.**

[ ] Designates Metric Conversions

Airflow Performance and Electrical Data (Cont.)

Model No.	Tonnage Application	Motor Speed From Factory	Nominal Air-Flow CFM	Blower Size/ Motor HP [W]		ECM CFM Air Delivery/RPM/Watts—230 Volts External Static Pressure—Inches W.C. [kPa]									
						0.1 [.02]	0.2 [.05]	0.3 [.07]	0.4 [.10]	0.5 [.12]	0.6 [.15]	0.7 [.17]	0.8 [.20]	0.9 [.22]	1.0 [.24]
4821 No Heat	3.5 Ton	High	1400*	10x10 3/4 [559]	CFM [L/s]	1395 [658]	1404 [663]	1413 [667]	1413 [667]	1411 [666]	1411 [666]	1402 [662]	1391 [656]	1380 [651]	1371 [647]
					RPM	731	807	859	910	968	1016	1057	1100	1128	1158
					Watts	240	273	308	349	383	411	436	468	496	513
4821 with 20 kW Heat	3.5 Ton	High	1400*	10x10 3/4 [559]	CFM [L/s]	1379 [651]	1382 [652]	1385 [654]	1380 [651]	1372 [648]	1367 [645]	1352 [638]	1336 [631]	1319 [622]	1305 [616]
					RPM	765	846	902	958	1020	1073	1118	1166	1198	1233
					Watts	261	300	340	387	426	460	490	528	561	584
4821 No Heat	4.0 Ton	High	1600*	10x10 3/4 [559]	CFM [L/s]	1583 [747]	1583 [747]	1583 [747]	1590 [750]	1582 [747]	1566 [739]	1572 [742]	1556 [734]	1547 [730]	1539 [726]
					RPM	826	879	933	984	1025	1067	1119	1148	1176	1219
					Watts	342	375	410	454	486	523	552	585	614	616
4821 with 25 kW Heat	4.0 Ton	High	1600*	10x10 3/4 [559]	CFM [L/s]	1567 [740]	1559 [736]	1551 [732]	1550 [732]	1534 [724]	1510 [713]	1508 [712]	1484 [700]	1467 [692]	1452 [685]
					RPM	860	919	978	1035	1082	1129	1187	1222	1255	1304
					Watts	363	403	444	495	534	577	613	653	688	697
4824 No Heat	4.0 Ton	High	1600*	11x11 3/4 [559]	CFM [L/s]	1607 [758]	1615 [762]	1622 [765]	1630 [769]	1637 [773]	1629 [769]	1621 [765]	1614 [762]	1606 [758]	1583 [747]
					RPM	612	698	747	788	835	870	914	950	981	1018
					Watts	225	297	334	359	410	439	469	502	532	568
4824 with 25 kW Heat	4.0 Ton	High	1600*	11x11 3/4 [559]	CFM [L/s]	1587 [749]	1589 [750]	1589 [750]	1591 [751]	1591 [751]	1577 [744]	1562 [737]	1549 [731]	1534 [724]	1505 [710]
					RPM	658	748	802	847	899	938	987	1027	1062	1104
					Watts	246	325	369	401	459	495	532	572	609	652
6024 No Heat	5.0 Ton	High	1600*	11x11 3/4 [559]	CFM [L/s]	1607 [758]	1615 [762]	1622 [765]	1630 [769]	1637 [773]	1629 [769]	1621 [765]	1614 [762]	1606 [758]	1583 [747]
					RPM	612	698	747	788	835	870	914	950	981	1018
					Watts	225	297	334	359	410	439	469	502	532	568
6024 with 25 kW Heat	5.0 Ton	High	1600*	11x11 3/4 [559]	CFM [L/s]	1587 [749]	1589 [750]	1589 [750]	1591 [751]	1591 [751]	1577 [744]	1562 [737]	1549 [731]	1534 [724]	1505 [710]
					RPM	658	748	802	847	899	938	987	1027	1063	1104
					Watts	246	325	369	401	459	495	532	572	609	652
6024 No Heat	5.0 Ton	High	1800*	11x11 3/4 [559]	CFM [L/s]	1794 [847]	1808 [853]	1808 [853]	1807 [853]	1807 [853]	1807 [853]	1807 [853]	1800 [850]	1786 [843]	1772 [836]
					RPM	676	739	787	840	871	923	950	994	1028	1050
					Watts	330	376	416	465	504	554	576	624	662	694
6024 with 30 kW Heat	5.0 Ton	High	1800*	11x11 3/4 [559]	CFM [L/s]	1756 [829]	1770 [835]	1770 [835]	1769 [835]	1769 [835]	1769 [835]	1769 [835]	1762 [832]	1748 [825]	1734 [818]
					RPM	713	778	828	884	917	971	1000	1047	1083	1107
					Watts	361	410	453	505	547	600	625	676	717	752

WARNING: Observe airflow operating limits. Do not operate above 1.0 in. W.C. system external static.
***The airflow for continuous fan is set at 50% of the cooling airflow.**

Blower Motor Electrical Data

Model No. RHKL	Voltage	Phase	Hertz	HP [W]	RPM	Speeds	Circuit Amps.	Minimum Circuit Ampacity	Maximum Circuit Protector
2417	208/240	1	60	1/3 [249]	300-1100	2	2.8	4.0	15
3617	208/240	1	60	1/2 [373]	300-1100	2	4.3	6.0	15
3821/4821/ 4824/6024	208/240	1	60	3/4 [559]	300-1100	2	6.8	9.0	15

[ ] Designates Metric Conversions

Electrical Data – With Electric Heat

Installation of the U.L. Listed original equipment manufacturer provided heater kits listed in the following table is recommended for all auxiliary heating requirements.

Air Handler Model RHKL	Heater Model No.	Heater kW (208/240V) (480V)	PH/HZ	No. Elements kW Per	Type Supply Circuit Single Circuit Multiple	Circuit Amps.	Motor Ampacity	Minimum Circuit Ampacity	Maximum Circuit Protector
-2417	RXBH-1724?03J	2.25/3.0	1/60	1 - 3.0	SINGLE	10.8/12.5	2.8	17/20	20/20
	RXBH-1724?05J	3.6/4.8	1/60	1 - 4.8	SINGLE	17.3/20.0	2.8	26/29	30/30
	RXBH-1724?07J	5.4/7.2	1/60	2 - 3.6	SINGLE	26.0/30.0	2.8	36/41	40/45
	RXBH-1724?10J	7.2/9.6	1/60	2 - 4.8	SINGLE	34.6/40.0	2.8	47/54	50/60
	RXBH-1724A07C	5.4/7.2	3/60	3 - 2.4	SINGLE	15.0/17.3	2.8	23/26	25/30
	RXBH-1724A10C	7.2/9.6	3/60	3 - 3.2	SINGLE	20.0/23.1	2.8	29/33	30/35
-3617	RXBH-1724?03J	2.25/3.0	1/60	1 - 3.0	SINGLE	10.8/12.5	4.0	19/21	20/25
	RXBH-1724?05J	3.6/4.8	1/60	1 - 4.8	SINGLE	17.3/20.0	4.0	27/30	30/30
	RXBH-1724?07J	5.4/7.2	1/60	2 - 3.6	SINGLE	26.0/30.0	4.0	38/43	40/45
	RXBH-1724?10J	7.2/9.6	1/60	2 - 4.8	SINGLE	34.6/40.0	4.0	49/55	50/60
	RXBH-1724A15J	10.8/14.4	1/60	3 - 4.8	SINGLE	51.9/60	4.0	70/80	70/80
	RXBH-1724A15J	3.6/4.8	1/60	1 - 4.8	MULTIPLE CKT 1	17.3/20.0	4.0	27/30	30/30
		7.2/9.6	1/60	2 - 4.8	MULTIPLE CKT 2	34.6/40.0	0.0	44/50	45/50
	RXBH-1724A07C	5.4/7.2	3/60	3 - 2.4	SINGLE	15.0/17.3	4.0	24/27	25/30
	RXBH-17A10C	7.2/9.6	3/60	3 - 3.2	SINGLE	20.0/23.1	4.0	30/34	30/35
	RXBH-17A15C	10.8/14.4	3/60	3 - 4.8	SINGLE	30.0/34.6	4.0	43/49	45/50
-3821 -4821	RXBH-1724?05J	3.6/4.8	1/60	1 - 4.8	SINGLE	17.3/20.0	5.8	29/33	30/35
	RXBH-1724?07J	5.4/7.2	1/60	2 - 3.6	SINGLE	26.0/30.0	5.8	40/45	40/45
	RXBH-1724?10J	7.2/9.6	1/60	2 - 4.8	SINGLE	34.6/40.0	5.8	51/58	60/60
	RXBH-1724A15J	10.8/14.4	1/60	3-4.8	SINGLE	51.9/60.0	5.8	73/83	80/90
	RXBH-1724A15J	3.6/4.8	1/60	1 - 4.8	MULTIPLE CKT 1	17.3/20.0	5.8	29/33	30/35
		7.2/9.6	1/60	2 - 4.8	MULTIPLE CKT 2	34.6/40.0	0.0	44/50	45/50
	RXBH-1724A18J	12.8/17	1/60	4 - 4.26	SINGLE	61.6/70.8	5.8	85/96	90/100
	RXBH-1724A18J	4.3/5.7	1/60	1 - 5.68	MULTIPLE CKT 1	20.5/23.6	5.8	33/37	35/40
		8.7/11.3	1/60	2 - 5.86	MULTIPLE CKT 2	41.1/47.2	0.0	52/59	60/60
	RXBH-24A20J	14.4/19.2	1/60	4 - 4.8	SINGLE	69.2/80	5.8	94/108	100/110
	RXBH-24A20J	7.2/9.6	1/60	2 - 4.8	MULTIPLE CKT 1	34.6/40.0	5.8	51/58	60/60
		7.2/9.6	1/60	2 - 4.8	MULTIPLE CKT 2	34.6/40.0	0.0	44/50	45/50
	RXBH-24A07C	5.4/7.2	3/60	3 - 2.4	SINGLE	15.0/17.3	5.8	26/29	30/30
	RXBH-24A10C	7.2/9.6	3/60	3 - 3.2	SINGLE	20.0/23.1	5.8	33/37	35/40
	RXBH-24A15C	10.8/14.4	3/60	3 - 4.8	SINGLE	30.0/34.6	5.8	45/51	45/60
	RXBH-24A20C	7.2/9.6	3/60	3 - 3.2	MULTIPLE CKT 1	20.0/23.1	5.8	33/37	35/40
		7.2/9.6	3/60	3 - 3.2	MULTIPLE CKT 2	20.0/23.1	0.0	25/29	25/30

- **Supply circuit protective devices may be fuses or "HACR" type circuit breakers.**
- **Largest motor load is included in single circuit and multiple circuit 1.**
- **If non-standard fuse size is specified, use next size larger standard fuse size.**
- **J Voltage (230V) single phase air handler is designed to be used with single or three phase 230 volt electric heaters. In the case of connecting 3-phase power to the air handler terminal block without the heater, bring only two leads to the terminal block cap, insulate and fully secure the third lead.**

[ ] Designates Metric Conversions

Electrical Data – With Electric Heat (Cont.)

Installation of the U.L. Listed original equipment manufacturer provided heater kits listed in the following table is recommended for all auxiliary heating requirements.

Air Handler Model RHKL	Heater Model No.	Heater kW (208/240V) (480V)	PH/HZ	No. Elements kW Per	Type Supply Circuit Single Circuit Multiple	Circuit Amps.	Motor Ampacity	Minimum Circuit Ampacity	Maximum Circuit Protector
-4824 -6024	RXBH-1724?07J	5.4/7.2	1/60	2 - 3.6	SINGLE	26.0/30.0	5.8	40/45	40/45
	RXBH-1724?10J	7.2/9.6	1/60	2 - 4.8	SINGLE	34.6/40.0	5.8	51/58	60/60
	RXBH-1724A15J	10.8/14.4	1/60	3 - 4.8	SINGLE	51.9/60.0	5.8	73/83	80/90
	RXBH-1724A15J	3.6/4.8	1/60	1 - 4.8	MULTIPLE CKT 1	17.3/20.0	5.8	29/33	30/35
		7.2/9.6	1/60	2 - 4.8	MULTIPLE CKT 2	34.6/40.0	0.0	44/50	45/50
	RXBH-1724A18J	12.8/17	1/60	4 - 4.26	SINGLE	61.6/70.8	5.8	85/96	90/100
	RXBH-1724A18J	4.3/5.7	1/60	1 - 5.68	MULTIPLE CKT 1	20.5/23.6	5.8	33/37	35/40
		8.7/11.3	1/60	2 - 5.86	MULTIPLE CKT 2	41.1/47.2	0.0	52/59	60/60
	RXBH-24A20J	14.4/19.2	1/60	4-4.8	SINGLE	69.2/80	5.8	94/108	100/110
	RXBH-24A20J	7.2/9.6	1/60	2 - 4.8	MULTIPLE CKT 1	34.6/40.0	5.8	51/58	60/60
		7.2/9.6	1/60	2 - 4.8	MULTIPLE CKT 2	34.6/40.0	0.0	44/50	45/50
	RXBH-24A25J	15.0/24.0	1/60	3 - 4.0	SINGLE	87.0/99.9	5.8	116/133	125/150
	RXBH-24A25J	5.0/8.0	1/60	2 - 4.0	MULTIPLE CKT 1	29.0/33.3	5.8	44/49	45/50
		5.0/8.0	1/60	2 - 4.0	MULTIPLE CKT 2	29.0/33.3	0.0	37/42	40/45
		5.0/8.0	1/60	2 - 4.0	MULTIPLE CKT 3	29.0/33.3	0.0	37/42	40/45
	RXBH-24A07C	5.4/7.2	3/60	3 - 2.4	SINGLE	15.0/17.3	5.8	26/29	30/30
	RXBH-24A10C	7.2/9.6	3/60	3 - 3.2	SINGLE	20.0/23.1	5.8	33/37	35/40
	RXBH-24A15C	10.8/14.4	3/60	3 - 4.8	SINGLE	30.0/34.6	5.8	45/51	45/60
	RXBH-24A20C	7.2/9.6	3/60	3 - 3.2	MULTIPLE CKT 1	20.0/23.1	5.8	33/37	35/40
		7.2/9.6	3/60	3 - 3.2	MULTIPLE CKT 2	20.0/23.1	0.0	25/29	25/30
	RXBH-24A25C	9.0/12.0	3/60	3 - 4.0	MULTIPLE CKT 1	25.0/28.9	5.8	39/44	40/45
		9.0/12.0	3/60	3 - 4.0	MULTIPLE CKT 2	25.0/28.9	0.0	32/37	35/40

- **Supply circuit protective devices may be fuses or "HACR" type circuit breakers.**
- **Largest motor load is included in single circuit and multiple circuit 1.**
- **If non-standard fuse size is specified, use next size larger standard fuse size.**
- **J Voltage (230V) single phase air handler is designed to be used with single or three phase 230 volt electric heaters. In the case of connecting 3-phase power to the air handler terminal block without the heater, bring only two leads to the terminal block cap, insulate and fully secure the third lead.**

[ ] Designates Metric Conversions

Electrical Wiring

Power Wiring

- Field wiring must comply with the National Electrical Code (C.E.C. in Canada) and any applicable local ordinance.
- Supply wiring must be 75°C minimum copper conductors only.
- See electrical data for product Ampacity rating and Circuit Protector requirement.

Grounding

- This product must be sufficiently grounded in accordance with National Electrical Code (C.E.C. in Canada) and any applicable local ordinance.
- A grounding lug is provided.

Accessories

- **Combustible Floor Base RXHB-**

Model Cabinet Size	Combustible Floor Base Model Number
17	RXHB-17
21	RXHB-21
24	RXHB-24

- **Jumper Bar Kit 3 Ckt. to 1 Ckt. RXBJ-A31** is used to convert single phase multiple three circuit units to a single supply circuit. Kit includes cover and screw for line side terminals.
- **Jumper Bar Kit 2 Ckt. to 1 Ckt. RXBJ-A21** is used to convert single phase multiple two circuit units to a single supply circuit. Kit includes cover and screw for line side terminals.
- **Note:** No jumper bar kit is available to convert three phase multiple two circuit units to a single supply circuit.

- **Auxiliary Horizontal Overflow Pan Accessory RXBM-**

Nominal Cooling Capacity-Tons	Auxiliary Horizontal Overflow Pan Accessory Model Number
1 1/2 - 3	RXBM-AC48
3 1/2 - 5	RXBM-AC61

- **External Filter Rack RXHF-B17, B21, B24**

Model Cabinet Size	Filter Size In. [mm]	Part Number*	A	B
17	16 x 20 [406 x 508]	RXHF-B17	16.90	20.77
21	20 x 20 [508 x 508]	RXHF-B21	20.40	20.77
24	25 x 20 [635 x 508]	RXHF-B24	25.00	21.04

*Accommodates 1" filter

[ ] Designates Metric Conversions

- **Auxiliary Electric Heater Kits RXBH-**
  Heater Kits include circuit breakers which meet UL and cUL requirements for service disconnect. See the Electric Heat Electrical Data in this specification sheet for specific Heater Kit Model numbers.

- **External Filter Base RXHF-**

Model Cabinet Size	Filter Size In. [mm]	Part Number*	A	B
21	20 x 20 [508 x 508]	RXHF-21	19.20	21.0
24	25 x 20 [635 x 508]	RXHF-24	22.70	25.5

*Accommodates 1" or 2" filter

- **Horizontal Adapter Kit RXHH-**
  This horizontal adapter kit is used to convert Upflow/Downflow only models to horizontal flow. See the following table to order proper horizontal adapter kit.

Coil Model	Horizontal Adapter Kit Model Number (Single Qty.)	Horizontal Adapter Kit Model Number (10-Pack Qty.)
2414	RXHH-A01	RXHH-A01 x 10
2417	RXHH-A02	RXHH-A02 x 10
3617/3621	RXHH-A03	RXHH-A03 x 10
3821/4821/4824	RXHH-A04	RXHH-A04 x 10
8024	RXHH-A05	RXHH-A05 x 10

- **External Filter Base RXHF-**

Model Cabinet Size	Filter Size In. [mm]	Part Number*	A	B
17	16 x 20 [406 x 508]	RXHF-17	15.70	17.5
21	20 x 20 [508 x 508]	RXHF-21	19.20	21.0
24	25 x 20 [635 x 508]	RXHF-24	22.70	25.5

*Accommodates 1" or 2" filter

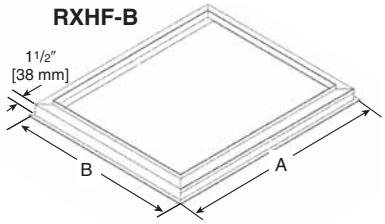

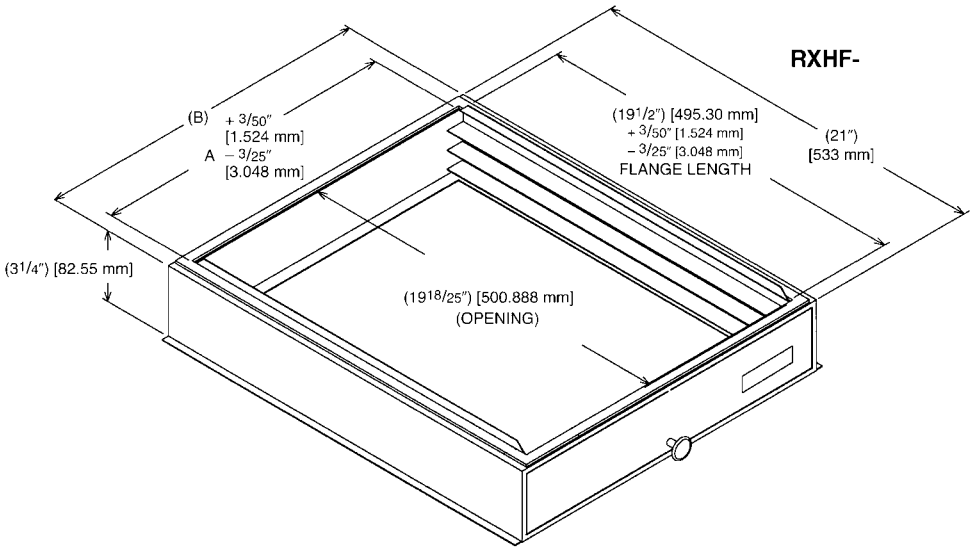

GENERAL TERMS OF LIMITED WARRANTY*

Ruud will furnish a replacement for any part of this product which fails in normal use and service within the applicable periods stated, in accordance with the terms of the limited warranty.

Conditional Parts (Registration Required) .....Ten (10) Years

***For complete details of the Limited and Conditional Warranties, including applicable terms and conditions, contact your local contractor or the Manufacturer for a copy of the product warranty certificate.**

In keeping with its policy of continuous progress and product improvement, Ruud reserves the right to make changes without notice.

Ruud Heating, Cooling & Water Heating • P.O. Box 17010
Fort Smith, Arkansas 72917 • www.ruud.com

Ruud Canada • 125 Edgeware Road, Unit 1
Brampton, Ontario • L6Y 0P5

Rely on Ruud.™

PRINTED IN U.S.A 12/12 QG FORM NO. H22-542