SUBMITTAL COVER SHEET

PROJECT NAME _____

LOCATION _____

ARCHITECT _____

ENGINEER _____

CONTRACTOR _____

SUBMITTED BY _____ DATE _____

UNIT SUMMARY

Quantity						
Unit Designation						
Model No.						
Total Cooling						
Sensible Cooling						
Air Ent. Evaporator						
Air Lvg. Evaporator						
Heating Input						
Heating Output						
CFM/ESP						
EER/SEER						
Electrical						
Minimum Ampacity						
Min.-Max. Breaker						
Net Unit Weight						
Accessory						
Catalog Form Number						

ACCESSORIES:

NOTES:

SUBMITTAL SHEET FOR RHKA/RHKL- 1½ TO 5 NOMINAL TON [5.3 TO 17.6 kW] AIR HANDLERS

JOB NAME _____ LOCATION _____

CONTRACTOR _____ ORDER NO. _____

ENGINEER _____ SUBMITTED FOR ☐ APPROVAL ☐ RECORD

DATE _____ OUTDOOR UNIT MODEL NO. _____

MODEL NO. _____ INDOOR COIL MODEL NO. _____

featuring R-410A earth friendly refrigerant

UNIT DATA

COOLING PERFORMANCE

TOTAL CAPACITY*..... _____ MBH [kW]

SENSIBLE CAPACITY*..... _____ MBH [kW]

OUTDOOR DESIGN TEMP. .... _____ °F [°C] DB

TOTAL SUPPLY AIR ..... _____ CFM [L/s]

TEMP. OF AIR ENTERING EVAPORATOR COIL..... _____ °F [°C] DB

_____ °F [°C] WB

POWER INPUT REQUIREMENT ..... _____ kW
(*uses blower motor heat)

HEATING PERFORMANCE

TOTAL CAPACITY*..... _____ MBH [kW]

OUTDOOR DESIGN TEMP. .... _____ °F [°C] DB

TEMP. OF AIR ENTERING EVAPORATOR COIL..... _____ °F [°C] DB

ELECTRIC HEAT CAPACITY ..... _____ kW

POWER INPUT REQUIREMENT ..... _____ kW
(*uses blower motor heat)

SUPPLY AIR BLOWER PERFORMANCE

TOTAL AIR SUPPLY ..... _____ CFM [L/s]

TOTAL RESISTANCE EXTERNAL TO UNIT..... _____ IWG

BLOWER SPEED ..... _____ RPM

POWER OUTPUT REQUIREMENT .. _____ BHP

MOTOR RATING ..... _____ HP [W]

POWER INPUT REQUIREMENT ..... _____ kW

ELECTRICAL DATA

POWER SUPPLY ..... _____ Hz

TOTAL UNIT AMPACITY..... _____ AMPS

MINIMUM WIRE SIZE ..... _____ AWG

MAXIMUM OVERCURRENT DEVICE FUSES/HACR BREAKER ..... _____ AMPS

CLEARANCES

SERVICE ACCESS FRONT 24" [609.6 mm]

FEATURES FOR RHKA/RHKL AIR HANDLERS 1½ TO 5 NOMINAL TONS [5.3 TO 17.6 kW]

- Includes an energy efficient GE® ECM® Motor, which in most applications, enhances the SEER rating of the outdoor unit. It also slowly ramps its speed up for quiet operation and enhanced customer satisfaction.
- Versatile 4-way convertible design for upflow, downflow, horizontal left and horizontal right applications.
- Nominal airflow up to 1.0" external static pressure.
- Factory-installed high efficiency indoor coil.
- Sturdy cabinet construction with 1.0 inch [25.4 mm] of foil faced insulation for excellent sound and insulating characteristics.
- Field-installed auxiliary electric heater kits provide exact heat for indoor comfort. Kits include circuit breakers which meet U.L. and cUL requirements for service disconnect.
- On-demand dehumidification terminal that adjusts airflow to help control humidity for unsurpassed comfort in cooling mode.
- Interface board with dip switches conveniently located in the blower compartment allows for precise, field selectable airflow to meet the requirements of particular applications.
- The most compact unit design available.
- Attractive pre-painted cabinet exterior.
- Coils are constructed of aluminum fins bonded to internally grooved copper tubing.
- Molded polymer corrosion resistant condensate drain pan is provided on all indoor coils.
- Supply duct flanges provided as standard on air handler cabinet.
- Provisions for field electrical connections available from either side or top of the air handler cabinet.
- Connection point for high voltage wiring is inside the air handler cabinet. Low voltage connection is made on the outside of the air handler cabinet.
- Concentric knockouts are provided for power connection to cabinet. Installer may pull desired hole size up to 2 inches [51 mm] for 1½ inch [38 mm] conduit.
- Internal checked TX valves are used on the Heat Pump indoor coil for more quiet refrigerant metering.
- A ten-year conditional parts warranty applies when the RHKL air handler is matched with a JEZ or JEC condensing unit or heat pump.

[ ] Designates Metric Conversions

c UL us LISTED

ARI PERFORMANCE CERTIFIED

ISO 9001:2000

Unit Dimensions

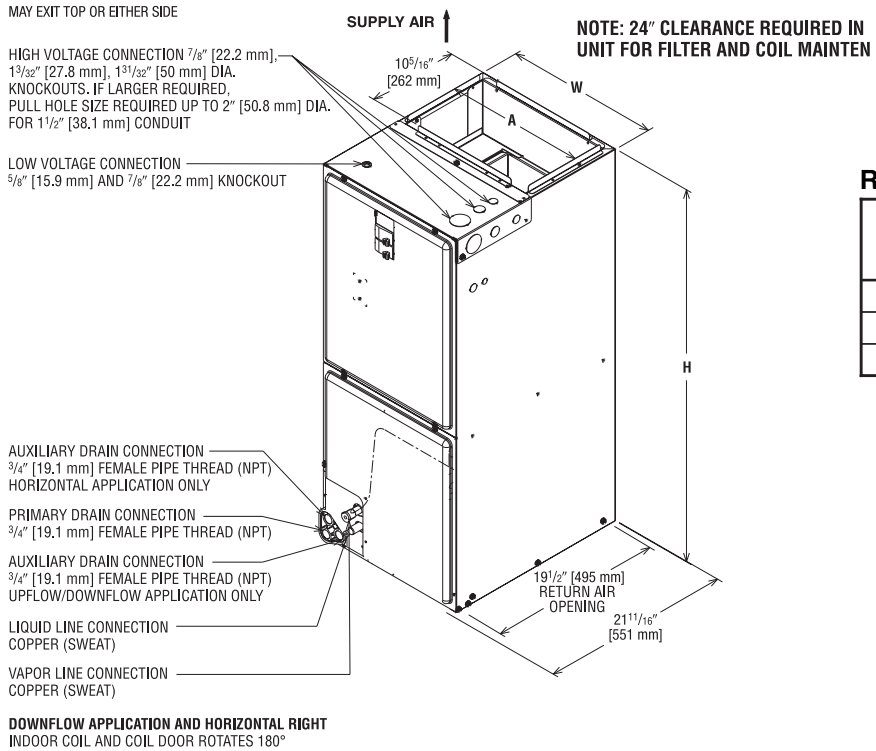

DOWNFLOW APPLICATION AND HORIZONTAL RIGHT
INDOOR COIL AND COIL DOOR ROTATES 180°

Return Air Opening Dimensions

Model Cabinet Size	Return Air Opening Width (Inches)	Return Air Opening Depth/Length (Inches)
17	16	19 1/2
21	19 1/2	19 1/2
24	23	19 1/2

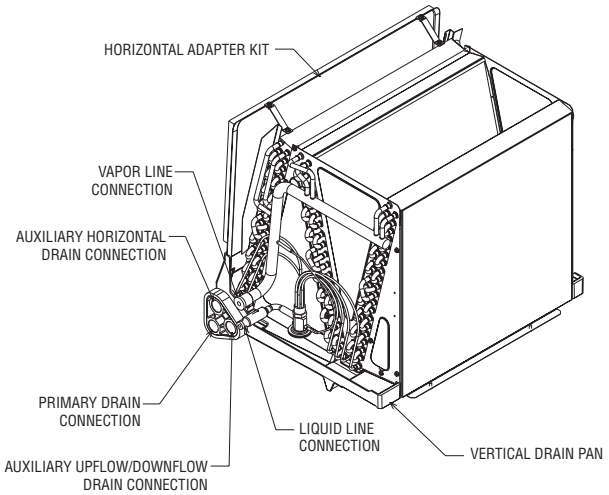

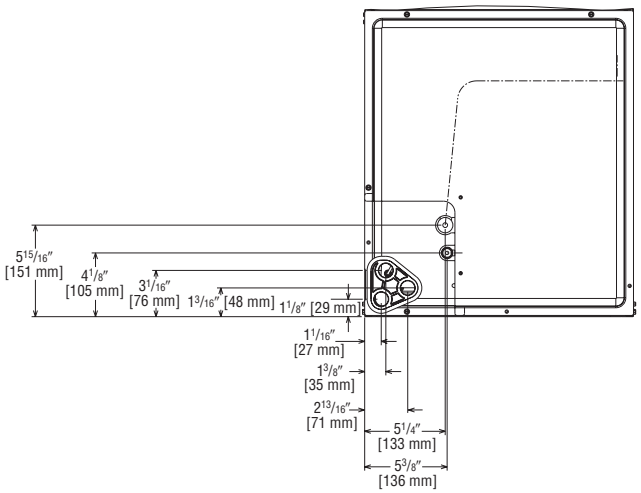

UPFLOW UNIT SHOWN:
UNIT MAY BE INSTALLED UPFLOW, DOWNFLOW, HORIZONTAL RIGHT OR LEFT AIR SUPPLY.

[ ] Designates Metric Conversions
( ) Designates Unit with Double Coil Cabinet

Unit Dimensions & Weights

Nominal Cooling Capacity Tons	Model Cabinet Size	Unit Width "W" In. [mm]	Unit Height "H" In. [mm]	Supply Duct "A" In. [mm]	Air Flow CFM (Nom.) [L/s]		Unit Weight/Shipping Weight (Lbs.) [kg]
					Lo	Hi	Unit With Coil (Max. KW)
1 1/2 & 2	17	17 1/2 [445]	42 1/2 [1080]	16 [406]	600 [283]	800 [378]	82/96 [37/44]
2 1/2 & 3	17	17 1/2 [445]	42 1/2 [1080]	16 [406]	1000 [472]	1200 [566]	92/106 [37/48]
3 1/2 & 4	21	21 [533]	50 1/2 [1282]	19 1/2 [495]	1400 [661]	1600 [755]	150/166 [68/75]
4	24	24 1/2 [622]	55 1/2 [1410]	23 [584]	1600 [755]	—	162/180 [73/81]
5	24	24 1/2 [622]	55 1/2 [1410]	23 [584]	—	1800 [850]	181/198 [82/90]

Before proceeding with installation, refer to installation instructions packaged with each model, as well as complying with all Federal, State, Provincial, and Local codes, regulations, and practices.

Rheem Sales Company, Inc.
P.O. Box 17010, Fort Smith, AR 72917

"In keeping with its policy of continuous progress and product improvement, Rheem reserves the right to make changes without notice."

PRINTED IN U.S.A. 3-09 DC
FORM NO. X33-1221 REV. 2
Supersedes Form No. X33-1221 Rev. 1