RUUD

Rely on Ruud.™

SUBMITTAL COVER SHEET

PROJECT NAME _____

LOCATION _____

ARCHITECT _____

ENGINEER _____

CONTRACTOR _____

SUBMITTED BY _____ DATE _____

UNIT SUMMARY

Quantity						
Unit Designation						
Model No.						
Total Cooling						
Sensible Cooling						
Air Ent. Evaporator						
Air Lvg. Evaporator						
Heating Input						
Heating Output						
CFM/ESP						
EER/SEER						
Electrical						
Minimum Ampacity						
Min.-Max. Breaker						
Net Unit Weight						
Accessory						
Catalog Form Number						

ACCESSORIES:

NOTES:

SUBMITTAL SHEET FOR (-)HPN- 18 SEER 2-5 NOMINAL TON [7.03-17.6 kW] AIR HANDLERS

JOB NAME _____ LOCATION _____

CONTRACTOR _____ ORDER NO. _____

ENGINEER _____ SUBMITTED FOR ☐ APPROVAL ☐ RECORD

DATE _____ OUTDOOR UNIT MODEL NO. _____

MODEL NO. _____ INDOOR COIL MODEL NO. _____

UNIT DATA

COOLING PERFORMANCE

TOTAL CAPACITY*..... _____ MBH [kW]

SENSIBLE CAPACITY*..... _____ MBH [kW]

OUTDOOR DESIGN TEMP. .... _____ °F [°C] DB

TOTAL SUPPLY AIR ..... _____ CFM [L/s]

TEMP. OF AIR ENTERING EVAPORATOR COIL..... _____ °F [°C] DB

_____ °F [°C] WB

POWER INPUT REQUIREMENT ..... _____ kW
(*uses blower motor heat)

HEATING PERFORMANCE

TOTAL CAPACITY*..... _____ MBH [kW]

OUTDOOR DESIGN TEMP. .... _____ °F [°C] DB

TEMP. OF AIR ENTERING EVAPORATOR COIL..... _____ °F [°C] DB

ELECTRIC HEAT CAPACITY ..... _____ kW

POWER INPUT REQUIREMENT ..... _____ kW
(*uses blower motor heat)

SUPPLY AIR BLOWER PERFORMANCE

TOTAL AIR SUPPLY ..... _____ CFM [L/s]

TOTAL RESISTANCE EXTERNAL TO UNIT..... _____ IWG

BLOWER SPEED ..... _____ RPM

POWER OUTPUT REQUIREMENT .. _____ BHP

MOTOR RATING ..... _____ HP [W]

POWER INPUT REQUIREMENT ..... _____ kW

ELECTRICAL DATA

POWER SUPPLY ..... _____ Hz

TOTAL UNIT AMPACITY..... _____ AMPS

MINIMUM WIRE SIZE ..... _____ AWG

MAXIMUM OVERCURRENT DEVICE FUSES/HACR BREAKER ..... _____ AMPS

CLEARANCES

SERVICE ACCESS FRONT 24" [609.6 mm]

FEATURES FOR (-)HPN- AIR HANDLERS 2-5 NOMINAL TON [7.03-17.6 kW]

- Includes an energy efficient ECM Motor, that slowly ramps its speed up for quiet operation and enhanced customer satisfaction.
- Versatile 4-way convertible design for upflow, downflow, horizontal left and horizontal right applications.
- Nominal airflow up to 1.0" external static pressure.
- Factory-installed high efficiency indoor coil.
- Sturdy cabinet construction with 1.0 inch [25.4 mm] of foil faced insulation for excellent sound and insulating characteristics.
- Field-installed auxiliary electric heater kits provide exact heat for indoor comfort. Kits include circuit breakers which meet U.L. and cUL requirements for service disconnect.
- Dip switch settings for selectable, customized cooling airflow over a wide variety of applications when wired in 24V conventional configurations.
- On-demand dehumidification terminal that adjusts airflow to help control humidity for unsurpassed comfort in cooling mode.
- External filter required.
- Advanced controls provide more comfort and diagnostic options.
- Blower automatically self-configures and no dip switch settings are required when installed with a communicating outdoor unit and a 500-Series Rheem thermostat.

[ ] Designates Metric Conversions

C UL US LISTED

AHRI CERTIFIED www.ahridirectory.org Unitary Small AC AHRI Standard 210/240

AHRI CERTIFIED www.ahridirectory.org Unitary Small HP AHRI Standard 210/240

ISO 9001:2008 Certificate Number: 30064

Unit Dimensions

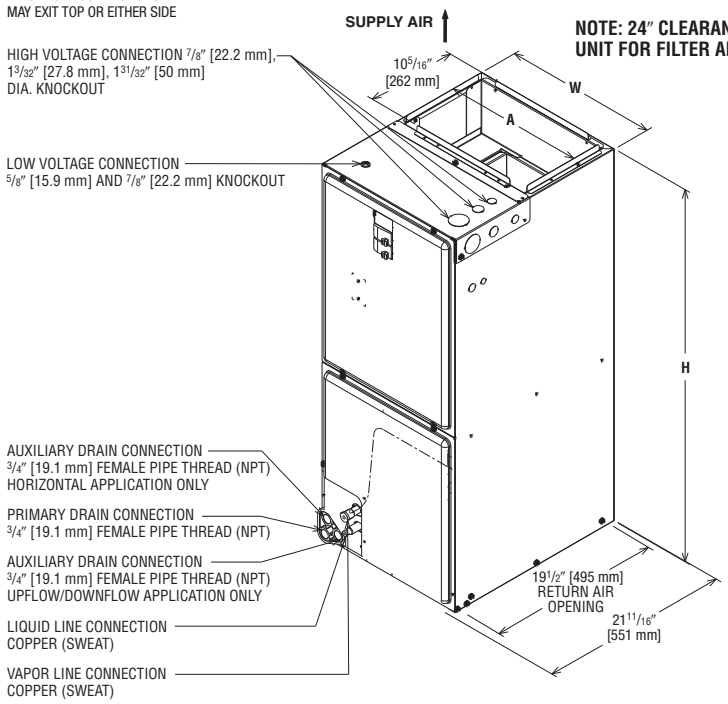

NOTE: 24″ CLEARANCE REQUIRED IN FRONT OF UNIT FOR FILTER AND COIL MAINTENANCE.

DOWNFLOW APPLICATION AND HORIZONTAL RIGHT
INDOOR COIL AND COIL DOOR ROTATES 180°

Return Air Opening Dimensions

Model Cabinet Size	Return Air Opening Width (Inches)	Return Air Opening Depth/Length (Inches)
21	19 3/8	19 1/2
24	22 7/8	19 1/2

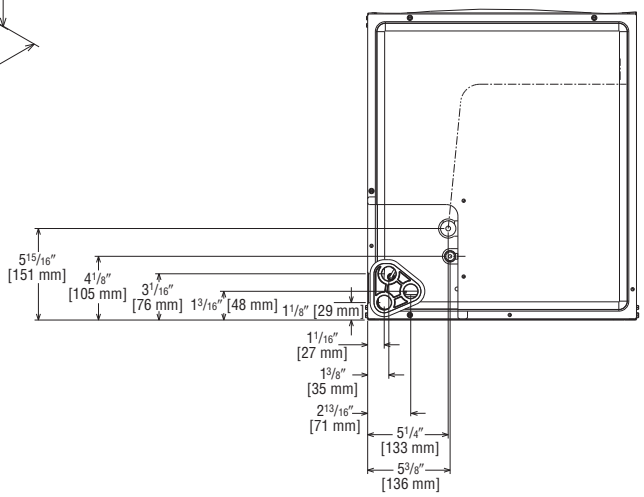

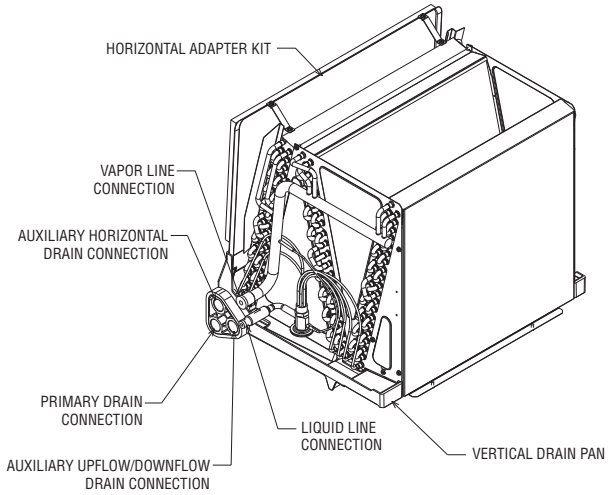

UPFLOW UNIT SHOWN:
UNIT MAY BE INSTALLED UPFLOW, DOWNFLOW, HORIZONTAL RIGHT OR LEFT AIR SUPPLY.

[ ] Designates Metric Conversions
( ) Designates Unit with Double Coil Cabinet

Unit Dimensions & Weights

Model Size (-)HPN-	Refrigerant Connections Sweat (in.) [mm] ID Liquid	Refrigerant Connections Sweat (in.) [mm] ID Vapor	Unit Width "W" In. [mm]	Unit Height "H" In. [mm]	Supply Duct "A" In. [mm]	Nominal Coil Airflow [L/s] 1st Stage ODD*	1st Stage Normal	2nd Stage ODD*	2nd Stage Normal	Unit Weight/Shipping Weight (Lbs.) [kg] Unit With Coil (Max. KW)
2421	3/8 [9.53]	3/4 [19.05]	21 [533]	42 1/2 [1080]	19 1/2 [495]	480 [227]	625 [295]	640 [302]	775 [366]	92/106 [42/48]
3624	3/8 [9.53]	7/8 [22.23]	24 1/2 [622]	55 1/2 [1410]	23 [584]	725 [342]	825 [389]	975 [460]	1175 [555]	181/198 [82/90]
						825 [389]	950 [448]	1000 [472]	1175 [555]	
4824	3/8 [9.53]	7/8 [22.23]	24 1/2 [622]	55 1/2 [1410]	23 [584]	960 [453]	1200 [566]	1280 [804]	1625 [767]	162/180 [73/81]
6024	3/8 [9.53]	7/8 [22.23]	24 1/2 [622]	55 1/2 [1410]	23 [584]	1040 [491]	1375 [649]	1360 [642]	1675 [791]	181/198 [82/90]

* Maximum dehumidification airflow

Before proceeding with installation, refer to installation instructions packaged with each model, as well as complying with all Federal, State, Provincial, and Local codes, regulations, and practices.

Rheem Sales Company, Inc.
P.O. Box 17010, Fort Smith, AR 72917

"In keeping with its policy of continuous progress and product improvement, Rheem reserves the right to make changes without notice."

PRINTED IN U.S.A. 9-13 QG FORM NO. X33-1360