SPIDER*fire* Water Heaters

SPIDER*fire*® is a family of ultra high efficiency commercial gas water heaters with up to a 97 percent thermal efficiency

Features & Benefits

The advanced line of 80 and 100-gallon Ruud SPIDER*fire* condensing water heaters offers breakthrough technology. It provides up to 97% thermal efficiency. The patented heat transfer system dramatically cuts fuel costs and is built to last. Models are available that range from 130,000-399,900 Btu/h, with a maximum temperature setting of 185 degrees.

Faster, Less Costly Venting

All models vent with standard 2”-3”-4” diameter PVC plastic pipe. SPIDER*fire*’s built-in exhaust riser vents at the top and eliminates the need to construct a side riser.

Smart LCD Control System

The new diagnostic system is standard on all SPIDER*fire* models. It enables installers and service technicians to monitor key functions and components. It includes a scrollable, operational history.

Innovative Technology

The heart of the SPIDER*fire* is its patented multi-leg, triple pass heat exchanger. The system is engineered as a ‘wet base’ design wherein the entire heat exchanger is submerged. That eliminates hot spots found in some other fully condensing water heaters. When hot spots are eliminated, the life of the product is extended and efficiency is maximized. These products are built to last.

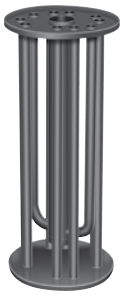

Power or Power Direct Vent

It can be installed as a power-vented product; or as a power direct-vented product – the latter for negative air pressure or if indoor air quality is a concern.

Corrosion Protection

Three-pass heat exchanger tubes are coated inside and out with a specially formulated porcelain enamel designed to protect against condensation.

Multiple Water Connections

Hot and cold water Inlets and outlets on both sides of the unit; 2" NPT high-flow connections.

Full-port, Full-flow Drain Valve

Factory installed brass drain valve allows for faster draining and servicing.

Advanced Burner Design

Latest models have increased burner surface area for ultra smooth ignition and quiet operation

Direct Spark Ignition System

Energy saving ignition that ignites pilot only when there is a call for heat.

Altitude Certification

Certified up to 8,999 feet

CSA/ASME Rated T&P Valve

Factory installed relief valve

Warranty

3-Year limited tank warranty, upgradeable to 5 years

See Commercial Warranty Certificate for complete information.

Efficiency | All models tested according to ANSI test procedures, and meet or exceed the thermal efficiency and standby loss requirements of ASHRAE standard (EPact). Also exceeds energy efficiency codes of all states including California Energy Commission (CEC).

Safety and Construction | Design certified by CSA: For operation at 185 degrees; meets all safety and construction requirement of ANSI Z21.10.3; as an automatic storage or instantaneous water heater; as an automatic circulating tank water heater; and for operation on combustible floors and in alcove installations. **Certified for 150 PSI maximum working pressure (160 PSI for ASME models).**

Optional Construction | ASME construction is available on designated models. UL Sanitation (NSF5) compliant models are available when equipped with optional seal kit (Part No. AS42690).

Ruud SPIDER*fire*

80 and 100-Gallon Capacities
130,000-399,900 Btu/h
Sealed Combustion System
Ultra Low NOx
Natural and LP Gas

With Optional Kit

ASME (OPTIONAL)

Low Lead Compliant

PRINTED IN U.S.A. 11/12 WP FORM NO. RR102C-18R

RECOVERY CAPACITIES

Recovery in U.S. Gallons/Hr. (GPH) and Liters/Hr. (LPH) at Various Temperature Rises

MODEL NUMBER	INPUT (BTU/H) NAT. & LP	THERMAL EFFICIENCY	UNITS	40°F (22 C)	50°F (28 C)	60°F (33 C)	70°F (39 C)	80°F (45 C)	90°F (50 C)	100°F (56 C)	110°F (61 C)	120°F (67 C)	130°F (72 C)	140°F (78 C)
GHE80-130(A)	130,000	97%	GPH	382	306	255	218	191	170	153	139	127	118	109
			LPH	*1448*	*1160*	*966*	*826*	*724*	*644*	*580*	*527*	*481*	*447*	*413*
GHE80-150(A)	150,000	94%	GPH	427	342	285	244	214	190	171	155	142	131	122
			LPH	*1618*	*1296*	*1080*	*925*	*811*	*720*	*648*	*587*	*538*	*496*	*462*
GHE80-200(A)	199,900	94%	GPH	569	456	380	325	285	253	228	207	190	175	163
			LPH	*2157*	*1728*	*1440*	*1232*	*1080*	*959*	*864*	*785*	*720*	*663*	*618*
GHE80-250(A)	250,000	92%	GPH	697	558	465	398	348	310	279	253	232	214	199
			LPH	*2642*	*2115*	*1762*	*1508*	*1319*	*1175*	*1057*	*959*	*879*	*811*	*754*
GHE80-300(A)	300,000	92%	GPH	836	669	558	478	418	372	335	304	279	257	239
			LPH	*3168*	*2536*	*2115*	*1812*	*1584*	*1410*	*1270*	*1152*	*1057*	*974*	*906*
GHE100-130(A)	130,000	95%	GPH	374	299	249	214	187	166	150	136	125	115	107
			LPH	*1418*	*1135*	*946*	*811*	*709*	*630*	*567*	*516*	*473*	*446*	*405*
GHE100-160(A)	160,000	95%	GPH	461	368	307	263	230	205	184	167	154	142	132
			LPH	*1746*	*1397*	*1164*	*998*	*873*	*776*	*698*	*635*	*582*	*537*	*499*
GHE100-200(A)	199,000	95%	GPH	573	458	382	327	286	255	229	208	191	176	164
			LPH	*2171*	*1737*	*1447*	*1241*	*1086*	*965*	*868*	*790*	*724*	*668*	*620*
GHE100-250(A)	250,000	93%	GPH	705	564	470	403	352	313	282	256	235	217	201
			LPH	*2670*	*2136*	*1780*	*1526*	*1335*	*1187*	*1068*	*971*	*890*	*822*	*763*
GHE100-300(A)	300,000	93%	GPH	845	676	564	483	423	376	338	307	282	260	242
			LPH	*3204*	*2563*	*2136*	*1831*	*1602*	*1424*	*1282*	*1165*	*1068*	*986*	*916*
GHE100-350(A)	350,000	92%	GPH	976	781	651	558	488	434	390	355	325	300	279
			LPH	*3698*	*2958*	*2465*	*2113*	*1849*	*1644*	*1479*	*1345*	*1233*	*1138*	*1057*
GHE100-400(A)	399,900	92%	GPH	1115	892	743	637	558	496	446	406	372	343	319
			LPH	*4226*	*3381*	*2816*	*2414*	*2115*	*1880*	*1688*	*1539*	*1410*	*1300*	*1209*

MAXIMUM DELIVERY

In U.S. Gallons and Liters (Includes useable storage and recovery for indicated times)

MODEL NUMBER	GAL.	LITERS	INPUT (BTU/H) NAT. & LP	TEMP. RISE	UNITS	5 MIN.	10 MIN.	15 MIN.	20 MIN.	30 MIN.	45 MIN.	1 HR.	2 HR.	3 HR.	MIN. TO RECOVER CONTENTS
GHE80-130(A)	80	303	130,000	100 F	GAL.	69	82	94	107	132	171	209	362	515	31
				56°C	*LTR.*	*262*	*311*	*356*	*406*	*500*	*648*	*792*	*1372*	*1952*	
GHE80-150(A)	80	303	150,000	100°F	GAL.	70	85	99	113	142	184	227	398	569	28
				56°C	*LTR.*	*265*	*322*	*375*	*428*	*538*	*697*	*860*	*1508*	*2157*	
GHE80-200(A)	80	303	199,900	100°F	GAL.	75	94	113	132	170	227	284	512	739	21
				56°C	*LTR.*	*284*	*356*	*428*	*500*	*644*	*860*	*1076*	*1940*	*2801*	
GHE80-250(A)	80	303	250,000	100°F	GAL.	79	103	126	149	195	265	335	614	892	17
				56 C	*LTR.*	*299*	*390*	*478*	*565*	*739*	*1004*	*1270*	*2327*	*3381*	
GHE80-300(A)	80	303	300,000	100°F	GAL.	84	112	140	168	223	307	391	725	1060	14
				56 C	*LTR.*	*318*	*424*	*531*	*637*	*845*	*1164*	*1482*	*2748*	*4017*	
GHE100-130(A)	100	379	130,000	100°F	GAL.	83	95	107	120	145	185	220	369	519	39
				56°C	*LTR.*	*313*	*360*	*407*	*454*	*549*	*700*	*833*	*1400*	*1967*	
GHE100-160(A)	100	379	160,000	100°F	GAL.	85	101	116	131	162	208	254	438	623	33
				56°C	*LTR.*	*323*	*382*	*440*	*498*	*614*	*789*	*964*	*1662*	*2360*	
GHE100-200(A)	100	379	199,000	100°F	GAL.	89	108	127	146	185	242	299	528	757	26
				56°C	*LTR.*	*338*	*410*	*482*	*555*	*700*	*917*	*1134*	*2002*	*2871*	
GHE100-250(A)	100	379	250,000	100°F	GAL.	94	117	141	164	211	281	352	634	916	21
				56°C	*LTR.*	*354*	*443*	*532*	*621*	*799*	*1066*	*1333*	*2402*	*3470*	
GHE100-300(A)	100	379	300,000	100°F	GAL.	98	126	155	183	239	324	408	746	1085	18
				56°C	*LTR.*	*372*	*479*	*586*	*693*	*906*	*1227*	*1547*	*2829*	*4110*	
GHE100-350(A)	100	379	350,000	100°F	GAL.	103	135	168	200	265	363	460	851	1241	15
				56°C	*LTR.*	*389*	*512*	*635*	*758*	*1005*	*1375*	*1745*	*3224*	*4703*	
GHE100-400(A)	100	379	399,900	100°F	GAL.	107	144	182	219	293	405	516	962	1408	14
				56°C	*LTR.*	*406*	*546*	*690*	*830*	*1110*	*1535*	*1956*	*3646*	*5324*	

All models have a maximum setpoint of 185°F.

VENTING OPTIONS

Power Direct Vent

MODEL NUMBER	PIPE DIAMETER 2"	PIPE DIAMETER 3"	PIPE DIAMETER 4"
	MAX. VENT LENGTH FOR INLET OR OUTLET (FT.)		
GHE80-130 GHE100-130	20	60	85
GHE80-160 GHE100-160	20	50	75
GHE80-200 GHE100-200	20	40	65
GHE80-250 GHE100-250	–	40	65
GHE80-300 GHE100-300	–	40	40
GHE100-350	–	40	40
GHE100-400	–	40	40

For each 90° elbow, reduce pipe length by five (5) feet.
For each 45° elbow, reduce pipe length by two and a half (2.5) feet.
Note: Vent pipe size should not be mixed for venting these units.
Use same diameter pipe for all venting of the unit.

Example of Venting for 2" Power Direct Vent Setup:
Refer to the chart above, “Power Direct Vent”, for actual length allowed on each model.

NUMBER OF 90° ELBOWS EXCLUDING VENT TERMINALS INLET VENT	OUTLET VENT	NUMBER OF 45° ELBOWS	MINIMUM VENT PIPE LENGTH IN FEET	MAXIMUM VENT PIPE LENGTH IN FEET
None	None	None	5.0	20.0
One (1)	One (1)	None	–	15.0
One (1)	One (1)	One (1)	–	12.5
Two (2)	Two (2)	None	–	10.0
Two (2)	Two (2)	One (1)	–	7.5
Three (3)	Three (3)	None	–	5.0
Three (3)	Three (3)	One (1)	–	2.5

Example of Venting for 4" Power Direct Vent Setup (GHE100-130):
Refer to the chart above, “Power Direct Vent”, for actual length allowed on each model. The 3" venting will follow the same format.
See allowable lengths above.

NUMBER OF 90° ELBOWS EXCLUDING VENT TERMINALS INLET VENT	OUTLET VENT	NUMBER OF 45° ELBOWS	MINIMUM VENT PIPE LENGTH IN FEET	MAXIMUM VENT PIPE LENGTH IN FEET
None	None	None	5.0	85.0
One (1)	One (1)	None	–	80.0
One (1)	One (1)	One (1)	–	77.5
Two (2)	Two (2)	None	–	75.0
Two (2)	Two (2)	One (1)	–	72.5
Three (3)	Three (3)	None	–	70.0
Three (3)	Three (3)	One (1)	–	67.5
Four (4)	Four (4)	None	–	65.0
Four (4)	Four (4)	One (1)	–	62.5
Five (5)	Five (5)	None	–	60.0

Power Vent

MODEL NUMBER	PIPE DIAMETER 2"	PIPE DIAMETER 3"	PIPE DIAMETER 4"
	MAX. VENT LENGTH FOR OUTLET (FT.)		
GHE80-130 GHE100-130	20	60	85
GHE80-160 GHE100-160	20	50	75
GHE80-200 GHE100-200	20	40	65
GHE80-250 GHE100-250	–	40	65
GHE80-300 GHE100-300	–	40	40
GHE100-350	–	40	40
GHE100-400	–	40	40

For each 90° elbow, reduce pipe length by five (5) feet.
For each 45° elbow, reduce pipe length by two and a half (2.5) feet.
Note: Vent pipe size should not be mixed for venting these units.
Use same diameter pipe for all venting of the unit.

Example of Venting for 2" Power Vent Setup:
Refer to the chart above, “Power Vent”, for actual length allowed on each model.

NUMBER OF 90° ELBOWS EXCLUDING VENT TERMINALS OUTLET VENT	NUMBER OF 45° ELBOWS	MINIMUM VENT PIPE LENGTH IN FEET	MAXIMUM VENT PIPE LENGTH IN FEET
None	None	5.0	20.0
One (1)	None	–	15.0
One (1)	One (1)	–	12.5
Two (2)	None	–	10.0
Two (2)	One (1)	–	7.5
Three (3)	None	–	5.0
Three (3)	One (1)	–	2.5

Example of Venting for 4" Power Vent Setup (GHE100-130):
Refer to the chart above, “Power Vent”, for actual length allowed on each model. The 3" venting will follow the same format. See allowable lengths above.

NUMBER OF 90° ELBOWS EXCLUDING VENT TERMINALS OUTLET VENT	NUMBER OF 45° ELBOWS	MINIMUM VENT PIPE LENGTH IN FEET	MAXIMUM VENT PIPE LENGTH IN FEET
None	None	5.0	85.0
One (1)	None	–	80.0
One (1)	One (1)	–	77.5
Two (2)	None	–	75.0
Two (2)	One (1)	–	72.5
Three (3)	None	–	70.0
Three (3)	One (1)	–	67.5
Four (4)	None	–	65.0
Four (4)	One (1)	–	62.5
Five (5)	None	–	60.0

DIMENSIONAL INFORMATION

All dimensions shown in English and Metric

MODEL NUMBER	UNITS	A	B	C	D	E	F	G	H	VENT	WATER CONN. INLET	WATER CONN. OUTLET	APPROX. SHIP. WT. (LB)*
GHE80-130(A)	inches	69-5/8	26-1/4†	56-7/8	12-3/4	64-5/8	64-13/16	62-13/16	57-3/8	2", 3", 4"	2" NPT	2" NPT	725
	mm	*1768*	*667*	*1445*	*324*	*1641*	*1646*	*1595*	*1457*				
GHE80-150(A)	inches	69-5/8	26-1/4†	56-7/8	12-3/4	64-5/8	64-13/16	62-13/16	57-3/8	2", 3", 4"	2" NPT	2" NPT	725
	mm	*1768*	*667*	*1445*	*324*	*1641*	*1646*	*1621*	*1457*				
GHE80-200(A)	inches	69-5/8	26-1/4†	56-7/8	12-3/4	64-5/8	64-13/16	62-13/16	57-3/8	2", 3", 4"	2" NPT	2" NPT	745
	mm	*1768*	*667*	*1445*	*324*	*1641*	*1646*	*1621*	*1457*				
GHE80-250(A)	inches	69-5/8	26-1/4†	56-7/8	12-3/4	64-5/8	64-13/16	62-13/16	57-3/8	3", 4"	2" NPT	2" NPT	745
	mm	*1768*	*667*	*1445*	*324*	*1641*	*1646*	*1621*	*1457*				
GHE80-300(A)	inches	69-5/8	26-1/4†	56-7/8	12-3/4	64-5/8	64-13/16	62-13/16	57-3/8	3", 4"	2" NPT	2" NPT	745
	mm	*1768*	*667*	*1445*	*324*	*1641*	*1646*	*1621*	*1457*				
GHE100-130(A)	inches	78-3/4	26-1/4†	66	12-3/4	73-3/4	73-5/8	72	66-7/16	2", 3", 4"	2" NPT	2" NPT	765
	mm	*2001*	*667*	*1674*	*324*	*1873*	*1869*	*1829*	*1687*				
GHE100-160(A)	inches	78-3/4	26-1/4†	66	12-3/4	73-3/4	73-5/8	72	66-7/16	2", 3", 4"	2" NPT	2" NPT	765
	mm	*2001*	*667*	*1674*	*324*	*1873*	*1869*	*1829*	*1687*				
GHE100-200(A)	inches	78-3/4	26-1/4†	66	12-3/4	73-3/4	73-5/8	72	66-7/16	2", 3", 4"	2" NPT	2" NPT	765
	mm	*2001*	*667*	*1674*	*324*	*1873*	*1869*	*1829*	*1687*				
GHE100-250(A)	inches	78-3/4	26-1/4†	66	12-3/4	73-3/4	73-5/8	72	66-7/16	3", 4"	2" NPT	2" NPT	795
	mm	*2001*	*667*	*1674*	*324*	*1873*	*1869*	*1829*	*1687*				
GHE100-300(A)	inches	78-3/4	26-1/4†	66	12-3/4	73-3/4	73-5/8	72	66-7/16	3", 4"	2" NPT	2" NPT	795
	mm	*2001*	*667*	*1674*	*324*	*1873*	*1869*	*1829*	*1687*				
GHE100-350(A)	inches	78-3/4	26-1/4†	66	12-3/4	73-3/4	73-5/8	72	66-7/16	3", 4"	2" NPT	2" NPT	800
	mm	*2001*	*667*	*1674*	*324*	*1873*	*1869*	*1829*	*1687*				
GHE100-400(A)	inches	78-3/4	26-1/4†	66	12-3/4	73-3/4	73-5/8	72	66-7/16	3", 4"	2" NPT	2" NPT	800
	mm	*2001*	*667*	*1674*	*324*	*1873*	*1869*	*1829*	*1687*				

0" CLEARANCE TO ALL COMBUSTIBLE SURFACES ON SIDES; 6" TOP CLEARANCE FOR 130 TO 300 MODELS; 8" FOR 350 TO 400 MODELS.

MODELS WITH INPUTS OF 130,000 BTU/H THRU 199,000 BTU/H ARE CERTIFIED TO VENT WITH 2" SCHEDULE 40 PVC, CPVC OR ABS PIPE.

*Weights listed are for non-ASME. Add 35 lbs. for ASME models.
130,000 - 199,000 Btu/h models are certified to be installed with 2" venting.
All models require a 120V power source.
Input rates 130-199: 1/2" gas inlet. Input rates 250-400: 3/4" gas inlet.
See use and care manual for venting details.
† Overall width is 27-5/16" due to exhaust cover.

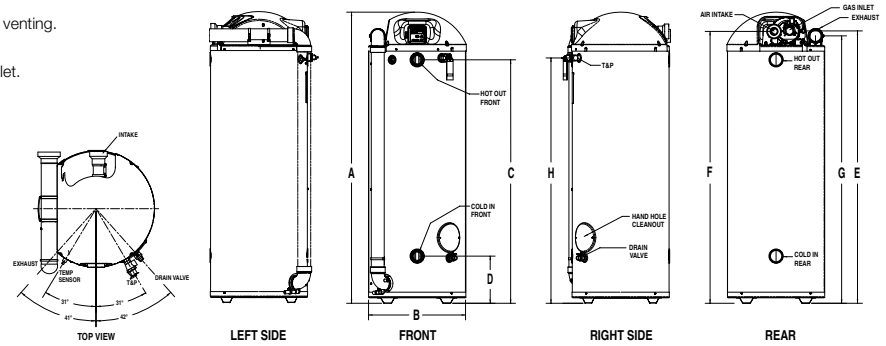

Recommended Specifications (for trade reference only)

Water heater(s) shall be SPIDER*fire* model _____, manufactured by Ruud, having a gas input of _____ Btu/h and recovery rate of _____ GPH at a 100°F temperature rise when tested and certified at _____ thermal efficiency. Water heater(s) shall have a storage capacity of _____ gallons. Water heater(s) shall have the CSA seal of certification and supplied with a factory installed CSA/ASME rated temperature and pressure relief valve, and meet SCAQMD Rule 1146.2. Tank(s) shall be of wet-base design and furnished with U.S. Patent 7,290,503 B2 heat exchange system with two-sided coating of high temperature porcelain enamel and furnished with magnesium anode rods rigidly supported. Water heater(s) shall have 2" NPT front and rear water connections. Water heater(s) shall meet or exceed thermal efficiency and standby loss requirements of ASHRAE. Tanks shall have a working pressure of 150 psi and shall be completely factory assembled, including a pressure regulator properly adjusted for operation on _____ gas with a down-fired burner system. Water heater(s) shall certified for schedule IV venting with power vent and powered direct vent options. Water heater(s) shall be covered by a three year limited tank warranty against tank leaks.

When ordering ASME construction, place (A) after the model number (for trade reference only)

Water heater(s) shall be constructed in accordance with the requirements of the ASME Boiler and Pressure Vessel Code, Section IV Part HLW.

In keeping with its policy of continuous progress and product improvement, Ruud reserves the right to make changes without notice.

PRINTED IN U.S.A. 11/12 WP FORM NO. RR102C-18R