Ultra™ High Efficiency Condensing Tankless Water Heaters

Ruud *Ultra*™ RUTGH is a series of high efficiency condensing tankless gas water heaters designed for continuous hot water

Efficiency
- Up to .94 EF with stainless steel condensing heat exchanger
- Intelligent electronic controls designed to increase energy efficiency and safety
- Third party efficiency listed by AHRI

Performance
- Industry First! 0.26 GPM minimum flow rate, 0.40 GPM minimum activation flow rate
- SCAQMD rule 1146.2 compliant
- RUTGH-95 for 3 bathroom homes*– 9.5 gal./min. at 35°F rise max., 8.4 gal./min. at 45°F rise
- **COMING SOON!** RUTGH-90 for 2-3 bathroom homes*– 9.0 gal./min. at 35°F rise max., 7.5 gal./min. at 45°F rise
- RUTGH-84 for 2-3 bathroom homes*– 8.4 gal./min. at 35°F rise max., 6.6 gal./min. at 45°F rise

Compact Size
- Compact space saving design – about the size of a medicine cabinet

Self-Diagnostic System
- Self-diagnostic system for easy installation and service.
- Digital display shows temperature setting and maintenance codes

Technology
- Two-pipe direct vent system designed for PVC pipe (up to 38 ft. of 3" PVC Pipe or 5 ft. of 2" PVC Pipe). See instructions for details
- Hot start programming helps minimize fluctuation in water temperature, referred to as “cold water sandwich,” during periods of frequent on/off operation
- Built-in electric blower
- Exclusive! Guardian overheat film wrap (OFW)
- EZ-Link cable available for higher demand applications to connect two tankless units to operate as one
- Manifold up to six units with an optional MIC-6 manifold control board
- Manifold up to 20 units with the optional MIC-185 plus the MICS-180 manifold control assembly

High Altitude Compliant
- High-altitude capability – up to 9,840 ft. elevation above sea level

Plus…
- Digital remote control and 10 ft. of thermostat wire included
- Supplied with a 120 volt power cord (indoor models only)
- Freeze protection to -30°F
- Required manual gas isolation valve included
- EZ- Spec™ Sizing Software – advanced online tool that takes the guess work out of sizing tankless applications – available at www.ruud.com/tankless

Warranty
- 12-Year on heat exchanger – residential, 5-year on the heat exchanger – commercial, 5-year on parts and 1-year on labor

See Warranty Certificate for complete information

Commercial Applications
The RUTGH Condensing Tankless Series can be upgraded for high-temperature commercial use.

- Temperature range is 85°F to 185°F

RUTGH-95 Upgrade Kits
RTG20240A for RUTGH-95DVLN
RTG20240B for RUTGH-95DVLP
RTG20240C for RUTGH-95XLN
RTG20240D for RUTGH-95XLP

COMING SOON!
RUTGH-90 Upgrade Kits
RTG20244A for RUTGH-90DVLN
RTG20244B for RUTGH-90DVLP
RTG20244C for RUTGH-90XLN
RTG20244D for RUTGH-90XLP

RUTGH-84 Upgrade Kits
RTG20241A for RUTGH-84DVLN
RTG20241B for RUTGH-84DVLP
RTG20241C for RUTGH-84XLN
RTG20241D for RUTGH-84XLP

Note: These upgrade kits are not compatible with previous models. See the Tankless Parts Catalog for a complete listing.

* Based on simultaneous showers using 2.5 gallons per minute. Flow rates vary depending on temperature of cold water supply.

RUTGH-DV
Indoor Direct Vent Model
11,000-199,900 Btu/h
Natural and LP Gas

RUTGH-X
Outdoor Model
11,000-199,900 Btu/h
Natural and LP Gas

LEED Points = 2

myruud.com/proclub

Ruud Water Heating • 101 Bell Road, Montgomery, Alabama 36117-4305 • www.ruud.com

PRINTED IN U.S.A. 01/14 WP FORM NO. TKR-806 Rev. 5

Ruud Residential Gas

Ultra™ High Efficiency Condensing Tankless Water Heaters

Ruud *Ultra*™ Specifications

DESCRIPTION			FEATURES					ROUGHING IN DIMENSIONS (SHOWN IN INCHES)							ENERGY INFO.		
MODEL NUMBER	GAS INPUT BTU/H	TYPE	TEMP. RANGE	MIN. FLOW/ ACTIVATION GPM	GPM @ 77° RISE MAX.	GPM @ 45° RISE MAX.	MAX. GPM	CONNECTION WATER	CONNECTION GAS	HEIGHT	WIDTH	DEPTH	VENT DIAM.	SHIP. WEIGHT (LBS.)	ENERGY FACTOR	RECOVERY EFFICIENCY	EST. YEARLY ENERGY COST NAT/LP
Ruud *Ultra*™ RUTGH-95 for 3 Bathroom Homes																	
RUTGH-95DVLN	11,000-199,900	Indoor Direct Vent	85° to 140° F	0.26/.040	4.9	8.4	9.5	3/4	3/4	27-1/2	18-1/2	9-3/4	2" or 3" PVC 2-Pipe	82	.94	94%	$174/421
RUTGH-95XLN	11,000-199,900	Outdoor	85° to 140° F	0.26/.040	4.9	8.4	9.5	3/4	3/4	27-1/2	18-1/2	9-3/4	N/A	82	.94	94%	$174/421
COMING SOON! Ruud *Ultra*™ RUTGH-90 for 2-3 Bathroom Homes																	
RUTGH-90DVLN	11,000-180,000	Indoor Direct Vent	85° to 140° F	0.26/.040	4.4	7.5	9	3/4	3/4	27-1/2	18-1/2	9-3/4	2" or 3" PVC 2-Pipe	82	.93	93%	$176/425
RUTGH-90XLN	11,000-180,000	Outdoor	85° to 140° F	0.26/.040	4.4	7.5	9	3/4	3/4	27-1/2	18-1/2	9-3/4	N/A	82	.93	93%	$176/425
Ruud *Ultra*™ RUTGH-84 for 2-3 Bathroom Homes																	
RUTGH-84DVLN	11,000-157,000	Indoor Direct Vent	85° to 140° F	0.26/.040	3.9	6.6	8.4	3/4	3/4	27-1/2	18-1/2	9-3/4	2" or 3" PVC 2-Pipe	82	.92	92%	$178/430
RUTGH-84XLN	11,000-157,000	Outdoor	85° to 140° F	0.26/.040	3.9	6.6	8.4	3/4	3/4	27-1/2	18-1/2	9-3/4	N/A	82	.92	92%	$178/430

Estimated energy cost based on a national average fuel cost of $1.09/therm for natural gas and $2.41/gallon for LP. Energy factor determined by the U.S. Department of Energy (DOE) test procedures.

All models are available in Natural Gas and Propane (LP). For Propane replace the N with P when ordering.

- SCAQMD 1146.2 compliant.
- Factory set maximum temperature is 120° F. See Use and Care Manual for setting.
- Consult factory for information on sizing the application.

Vent Termination Kits are required for Direct Vent models. Contact your distributor for details.

Proper gas pressure must be ensured to supply tankless gas water heaters – up to 199,900 Btu/h for RUTGH-95 models, up to 180,000 Btu/h for RUTGH-90 models, up to 157,000 Btu/h for RUTGH-84 models. (Consult your gas supplier)

	Temperature Rise (° F)								
Model Number	35°	45°	50°	60°	70°	77°	80°	90°	100°
RUTGH-95 Water Flow (GPM)	9.5	8.4	7.6	6.3	5.4	4.9	4.7	4.2	3.8
RUTGH-90 Water Flow (GPM)	9.0	7.5	6.8	5.6	4.8	4.4	4.2	3.8	3.4
RUTGH-84 Water Flow (GPM)	8.4	6.6	6.0	5.0	4.3	3.9	3.7	3.3	3.0

Above estimates are for sizing purposes only.

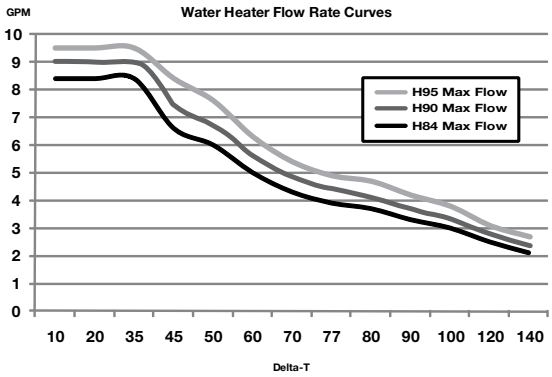

Maximum Vent Length (intake/outlet):

Number of 90° Elbows	Maximum Length of 2" Straight Pipe	Maximum Length of 3" Straight Pipe
0 or 1	5.0 ft. (1.5 m)	38.0 ft. (11.6 m)
2	3.5 ft. (1.0 m)	36.5 ft. (11.1 m)
3	2.0 ft. (0.6 m)	35.0 ft. (10.6 m)
4	Not Available	33.5 ft. (10.2 m)
5	Not Available	32.0 ft. (9.8 m)
6	Not Available	30.5 ft. (9.3 m)

Parts and Accessories

Venting & terminations – 2" or 3" PVC, recess boxes, pipe covers, extra remote controls, EZ-Link, manifolds and cables, service valve kits, service parts, flush kits

For more information on Tankless parts and accessories, see the Parts and Accessories catalog or call 866-720-2076.

Indoor Direct Vent

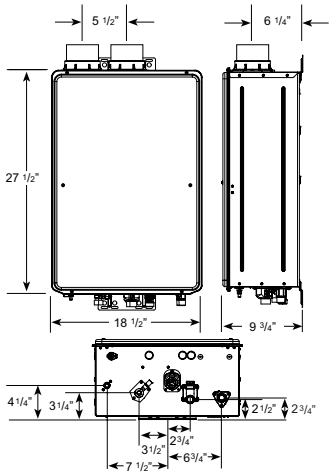

Outdoor

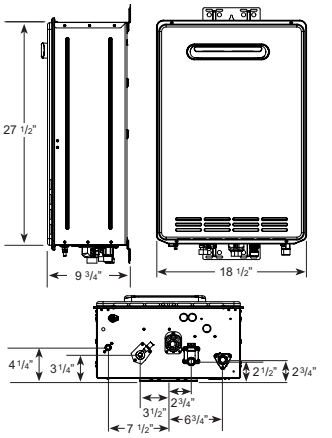

In keeping with its policy of continuous progress and product improvement, Ruud reserves the right to make changes without notice.

PRINTED IN U.S.A. 01/14 WP FORM NO. TKR-806 Rev. 5