FORM NO. A22-199 REV. 4
Supersedes Form No. A22-199 Rev. 3

CONDENSING UNITS

QUALIFIES FOR FEDERAL TAX CREDIT

"Visit www.Ruud.com for complete details."

RUUD®

ACHIEVER® Series

UAPM- JAZ R-410A

14.5 SEER Models
Efficiencies up to 16.00 SEER
Nominal Sizes 1 1/2 to 5 Tons
[5.28 kW] to [17.6 kW]

Eight Models

Cooling Capacities
18,800 to 62,500 BTU/HR
[5.50 kW] to [18.32 kW]

The Ruud *Achiever® Series* High Efficiency UAPM- Condensing Units were designed with performance in mind. These units offer comfort, energy conservation and dependability for single, multi-family and light commercial applications.

These units also contain the most advanced alternate refrigerant which contains no chlorofluorocarbons (CFCs), or hydrochlorofluorocarbons (HCFCs), or other compounds that may leak from air-conditioning systems and potentially harm the protective ozone layer of the Earth's atmosphere.

The Ruud *Achiever® Series* UAPM- Condensing Units are the result of an ongoing development program for improved efficiencies. These units are flexible enough to achieve up to 16.00 SEER in specific match-ups, continuing a tradition of high efficiency.

- Attractive, louvered wrap-around jacket protects the coil from yard hazards and weather extremes. Top grille is steel reinforced for extra strength. Cabinet is powder painted for all-weather protection.
- Air is discharged upward away from bushes and shrubs. The discharge pattern of the top grille provides minimum air restriction.
- Combination Grille/Motor Mount secures the motor to the underside of the discharge grille. The grille protects the motor windings and bearings from rain and snow.
- All controls are accessible by removing one service panel. Removable top grille provides access to the condenser fan motor and condenser coil.
- Single speed 8-pole fan motor designed for low speed, quiet, energy-saving operation.
- All models meet or exceed a 1000-hour salt spray test per ASTM B117 Standard Practice for Operating Salt Spray Testing Apparatus.

Accredited by the RvA
ABS Quality Evaluations, Inc. Management System Certification
ANAB ACCREDITED
ISO 9001:2008
Certificate Number: 30164

ENERGUIDE
Seasonal Energy Efficiency Ratio (SEER)
THIS MODEL 14.5
13.0 — Uses least energy → 21.0

ENERGY STAR

AHRI CERTIFIED™ www.ahridirectory.org
Unitary Small AC
AHRI Standard 210/240
Certification applies only when the complete system is listed with AHRI.

C UL US LISTED

IN CERTAIN MATCHED SYSTEMS

"Proper sizing and installation of equipment is critical to achieve optimal performance. Split system air conditioners and heat pumps must be matched with appropriate coil components to meet ENERGY STAR criteria. Ask your Contractor for details or visit www.energystar.gov."

All controls and compressor are accessible for servicing by removal of the service panel.

Drawn Painted Base Pan.

Engineering Features

UAPM- Series Condensing Units

1. This unit contains a special scroll compressor that is designed specifically to operate with R-410A refrigerants and polyolester (POE) oils. The compressor is hermetically sealed and incorporates internal high temperature motor overload protection and durable insulation on the motor windings. It is externally mounted on rubber grommets to reduce vibration and noise.
2. Compressors have an internal pressure relief assembly to protect against excessive pressure differential.
3. All refrigerant connections are on the exterior of the unit, located close to the ground for neat appearing installations.
4. Cabinet is constructed of powder painted galvanized steel. The full wraparound louvered grille protects the coil from damage.
5. Copper tube—aluminum fin coils are used on all models.
6. The control box is located in the top corner of the cabinet providing for easy access through a service panel.
7. Service valves are standard on all models.
8. Power and control wiring are kept separate.
9. Every unit is factory charged and tested.
10. Separate compressor compartment for easy service access.
11. Drawn, painted base pan for extra corrosion resistance and sound reduction.
12. Automatic reset high and low pressure controls are standard on all models.
13. A liquid line filter drier is standard on all models (shipped – not installed).

Model Number Identification

U	A	P	M	—	018	J	A	Z
RUUD	REMOTE CONDENSING UNIT	P = 14 SEER	DESIGN SERIES M = R-410A (2ND DESIGN SERIES)		COOLING CAPACITY 018 = 18,000 BTU/HR [5.28 kW] 024 = 24,000 BTU/HR [7.03 kW] 030 = 30,000 BTU/HR [8.79 kW] 036 = 36,000 BTU/HR [10.55 kW] 042 = 42,000 BTU/HR [12.31 kW] 048 = 48,000 BTU/HR [14.07 kW] 056 = 56,000 BTU/HR [16.41 kW] 060 = 60,000 BTU/HR [17.58 kW]	ELECTRICAL DESIGNATION J = 208/230V-1-60	VARIATIONS A-SERIES = FULL-FEATURED	COOLING CONNECTION FITTING Z = SWEAT W/SCROLL

[ ] Designates Metric Conversions

Field Installed Accessories

- **Compressor Time Delay Control**—Compressor will remain off for five minutes after power or thermostat interruption, allowing system pressures to equalize. (Model No. RXMD-B01)
- **Thermostats—**

100-Series *
Non-Programmable

200-Series *
Programmable

300-Series *
Deluxe
Programmable

400-Series *
Special Applications/
Programmable

500-Series *
Communicating/
Programmable

Brand	Unique Model Number Prefix		Descriptor (3 Characters)	Series (3 Characters)	System (2 Characters)	Type (2 Characters)
UHC		-	TST	101	GE	MS
UHC=Ruud			TST=Thermostat	100=Non-Programmable 200=Programmable 300=Deluxe Programmable 400=Special Applications/ Programmable 500=Communicating/ Programmable	GE=Gas/Oil/Electric HP=Heat Pump MD=Modulating Furnace DF=Dual Fuel UN=Universal AC/HP/GE CM=Communicating	SS=Single-Stage MS=Multi-Stage

** Photos are representative. Actual models may vary.*

For detailed thermostat match-up information, see specification sheet form number T22-001.

- **Low Ambient Control**—Cycles outdoor fan to maintain adequate condensing pressures assuring liquid refrigerant flow to the coil. Allows indoor cooling with outdoor temperatures down to 0°F [–17.8°C]. It is recommended that this control be installed in units to be operated at outdoor ambient temperatures under 65°F (18°C). (Model No. RXAD-A08)
- **Hard Start Components**—(Available through PROSTOCK®)
- **Compressor Crankcase Heater (CCH)**—While scroll compressors usually do not require crankcase heaters, there are instances when a heater should be added. Refrigerant migration during the off cycle can result in a noisy start up. Add a crankcase heater to minimize refrigeration migration, and to help eliminate any start up noise or bearing "wash out". (Available through PROSTOCK®)

SCROLL® COMPRESSOR

The scroll compressor is the key to efficiency for this Ruud model. It's the latest in high-efficiency compressor technology. The advanced scroll compressor offers low noise and vibration characteristics and features tolerance to liquid refrigerant and system contamination. The scroll compressor also has low start torque, reducing start problems in the field. And its unique design enables the UAPM- condensing units to perform efficiently, quietly and dependably. UAPM- JAZ has a 10-year compressor warranty.

[ ] Designates Metric Conversions

Performance Data @ AHRI Standard Conditions—Cooling: UAPM- JAZ

Model Numbers		80°F [26.5°C] DB/67°F [19.5°C] WB Indoor Air 95°F [35°C] DB Outdoor Air					Sound Rating dB	Indoor CFM [L/s]
Outdoor Unit UAPM-	Indoor Coil and/or Air Handler	Total Capacity BTU/H [kW]	Net Sensible BTU/H [kW]	Net Latent BTU/H [kW]	EER	SEER		
Rev. 6/30/10	RCFL-H*2417+RXMD-C04 ①	18,800 [5.5]	13,800 [4.0]	5,000 [1.5]	12.15	14.50	74	650 [307]
	RCFL-A*2414+RXMD-C04	18,800 [5.5]	13,800 [4.0]	5,000 [1.5]	12.15	14.50	74	650 [307]
	RCFL-A*2417 (-GFD-06?MCK?)	19,100 [5.6]	13,850 [4.1]	5,250 [1.5]	13.50	16.00	74	600 [283]
	RCFL-A*2417 (-GFD-07?MCK?)	19,100 [5.6]	13,850 [4.1]	5,250 [1.5]	13.55	16.00	74	600 [283]
	RCFL-A*2417 (-GFE-06?MCK?)	18,900 [5.5]	13,650 [4.0]	5,250 [1.5]	13.00	16.00	74	575 [271]
	RCFL-A*2417 (-GFE-07?MCK?)	19,100 [5.6]	13,850 [4.1]	5,250 [1.5]	13.00	16.00	74	600 [283]
	RCFL-A*2417 (-GGD-06?MCK?)	19,100 [5.6]	13,850 [4.1]	5,250 [1.5]	13.70	16.00	74	600 [283]
	RCFL-A*2417 (-GGD-07?MCK?)	19,400 [5.7]	14,250 [4.2]	5,150 [1.5]	13.80	16.00	74	625 [295]
	RCFL-A*2417 (-GGE-06?MCK?)	19,300 [5.7]	14,150 [4.1]	5,150 [1.5]	13.00	16.00	74	625 [295]
	RCFL-A*2417 (-GGE-07?MCK?)	19,000 [5.6]	13,700 [4.0]	5,300 [1.6]	13.00	16.00	74	575 [271]
	RCFL-A*2417 (-GLE-07?AMK?)	19,100 [5.6]	13,850 [4.1]	5,250 [1.5]	13.00	16.00	74	600 [283]
	RCFL-A*2417 (-GLR-07?AMK?)	19,100 [5.6]	13,850 [4.1]	5,250 [1.5]	13.75	16.00	74	600 [283]
	RCFL-A*2417 (RGLT-07?AME?)	19,400 [5.7]	14,250 [4.2]	5,150 [1.5]	13.00	16.00	74	675 [319]
	RCFL-A*2417 (-GPE-05?BMK?)	18,900 [5.5]	13,650 [4.0]	5,250 [1.5]	13.00	16.00	74	575 [271]
	RCFL-A*2417 (-GPE-07?AMK?)	19,400 [5.7]	14,250 [4.2]	5,150 [1.5]	13.00	16.00	74	625 [295]
	RCFL-A*2417 (-GPR-05?BMK?)	19,000 [5.6]	13,800 [4.0]	5,200 [1.5]	13.40	16.00	74	600 [283]
	RCFL-A*2417 (-GPR-07?AMK?)	19,100 [5.6]	13,850 [4.1]	5,250 [1.5]	13.70	16.00	74	600 [283]
	RCFL-A*2417 (RGPT-05?BMK?)	19,300 [5.7]	14,200 [4.2]	5,100 [1.5]	13.00	16.00	74	650 [307]
	RCFL-A*2417 (RGPT-07?AME?)	19,400 [5.7]	14,250 [4.2]	5,150 [1.5]	13.00	16.00	74	625 [295]
	RCFL-A*2417 (-GRM-04?MAE?)	18,900 [5.5]	13,650 [4.0]	5,250 [1.5]	13.00	16.00	74	575 [271]
	RCFL-A*2417 (-GRM-06?MAE?)	19,100 [5.6]	13,850 [4.1]	5,250 [1.5]	13.00	16.00	74	600 [283]
	RCFL-A*2417 (-GRM-07?MAE?)	19,300 [5.7]	14,200 [4.2]	5,100 [1.5]	13.00	16.00	74	625 [295]
	RCFL-A*2417 (-GTM-06?MAE?)	19,300 [5.7]	14,200 [4.2]	5,100 [1.5]	13.00	16.00	74	625 [295]
	ROCA-070E03 (RCFL-A*2417)	19,100 [5.6]	13,900 [4.1]	5,200 [1.5]	13.00	16.00	74	600 [283]
	ROLA-070E03 (RCFL-A*2417)	19,100 [5.6]	13,900 [4.1]	5,200 [1.5]	13.00	16.00	74	600 [283]
	RCFL-A*2417+RXMD-C04	18,800 [5.5]	13,800 [4.0]	5,000 [1.5]	12.15	14.50	74	650 [307]
018JAZ	RCFL-H*2414+RXMD-C04	18,800 [5.5]	13,800 [4.0]	5,000 [1.5]	12.15	14.50	74	650 [307]
	RCFL-H*2417 (-GFD-06?MCK?)	19,100 [5.6]	13,850 [4.1]	5,250 [1.5]	13.50	16.00	74	600 [283]
	RCFL-H*2417 (-GFD-07?MCK?)	19,100 [5.6]	13,850 [4.1]	5,250 [1.5]	13.55	16.00	74	600 [283]
	RCFL-H*2417 (-GFE-06?MCK?)	18,900 [5.5]	13,650 [4.0]	5,250 [1.5]	13.00	16.00	74	575 [271]
	RCFL-H*2417 (-GFE-07?MCK?)	19,100 [5.6]	13,850 [4.1]	5,250 [1.5]	13.00	16.00	74	600 [283]
	RCFL-H*2417 (-GGD-06?MCK?)	19,100 [5.6]	13,850 [4.1]	5,250 [1.5]	13.70	16.00	74	600 [283]
	RCFL-H*2417 (-GGD-07?MCK?)	19,400 [5.7]	14,250 [4.2]	5,150 [1.5]	13.80	16.00	74	625 [295]
	RCFL-H*2417 (-GGE-06?MCK?)	19,300 [5.7]	14,150 [4.1]	5,150 [1.5]	13.00	16.00	74	625 [295]
	RCFL-H*2417 (-GGE-07?MCK?)	19,000 [5.6]	13,700 [4.0]	5,300 [1.6]	13.00	16.00	74	575 [271]
	RCFL-H*2417 (-GJD-06?MCK?)	19,100 [5.6]	13,850 [4.1]	5,250 [1.5]	13.70	16.00	74	600 [283]
	RCFL-H*2417 (-GJD-07?MCK?)	19,400 [5.7]	14,250 [4.2]	5,150 [1.5]	13.80	16.00	74	625 [295]
	RCFL-H*2417 (-GJF-06?MCK?)	19,300 [5.7]	14,150 [4.1]	5,150 [1.5]	13.00	16.00	74	625 [295]
	RCFL-H*2417 (-GJF-07?MCK?)	19,000 [5.6]	13,700 [4.0]	5,300 [1.6]	13.00	16.00	74	575 [271]
	RCFL-H*2417 (-GLE-07?AMK?)	19,100 [5.6]	13,850 [4.1]	5,250 [1.5]	13.00	16.00	74	600 [283]
	RCFL-H*2417 (-GLR-07?AMK?)	19,100 [5.6]	13,850 [4.1]	5,250 [1.5]	13.75	16.00	74	600 [283]
	RCFL-H*2417 (RGLT-07?AME?)	19,400 [5.7]	14,250 [4.2]	5,150 [1.5]	13.00	16.00	74	675 [319]
	RCFL-H*2417 (-GPE-05?BMK?)	18,900 [5.5]	13,650 [4.0]	5,250 [1.5]	13.00	16.00	74	575 [271]
	RCFL-H*2417 (-GPE-07?AMK?)	19,400 [5.7]	14,250 [4.2]	5,150 [1.5]	13.00	16.00	74	625 [295]
	RCFL-H*2417 (-GPR-05?BMK?)	19,000 [5.6]	13,800 [4.0]	5,200 [1.5]	13.40	16.00	74	600 [283]
	RCFL-H*2417 (-GPR-07?AMK?)	19,100 [5.6]	13,850 [4.1]	5,250 [1.5]	13.70	16.00	74	600 [283]
	RCFL-H*2417 (RGPT-05?BMK?)	19,300 [5.7]	14,200 [4.2]	5,100 [1.5]	13.00	16.00	74	650 [307]
	RCFL-H*2417 (RGPT-07?AME?)	19,400 [5.7]	14,250 [4.2]	5,150 [1.5]	13.00	16.00	74	625 [295]
	RCFL-H*2417 (-GRM-04?MAE?)	18,900 [5.5]	13,650 [4.0]	5,250 [1.5]	13.00	16.00	74	575 [271]
	RCFL-H*2417 (-GRM-06?MAE?)	19,100 [5.6]	13,850 [4.1]	5,250 [1.5]	13.00	16.00	74	600 [283]
	RCFL-H*2417 (-GRM-07?MAE?)	19,300 [5.7]	14,200 [4.2]	5,100 [1.5]	13.00	16.00	74	625 [295]
	RCFL-H*2417 (-GTM-06?MAE?)	19,300 [5.7]	14,200 [4.2]	5,100 [1.5]	13.00	16.00	74	625 [295]
	ROCA-070E03 (RCFL-H*2417)	19,100 [5.6]	13,900 [4.1]	5,200 [1.5]	13.00	16.00	74	600 [283]

① Highest sales volume tested combination required by D.O.E. test procedures.

[ ] Designates Metric Conversions

Performance Data @ AHRI Standard Conditions—Cooling: UAPM- JAZ (continued)

Model Numbers		80°F [26.5°C] DB/67°F [19.5°C] WB Indoor Air 95°F [35°C] DB Outdoor Air					Sound Rating dB	Indoor CFM [L/s]
Outdoor Unit UAPM-	Indoor Coil and/or Air Handler	Total Capacity BTU/H [kW]	Net Sensible BTU/H [kW]	Net Latent BTU/H [kW]	EER	SEER		
Rev. 6/30/10	ROLA-070E03 (RCFL-H*2417)	19,100 [5.6]	13,900 [4.1]	5,200 [1.5]	13.00	16.00	74	600 [283]
	-BHP-17 (RCHL-24A2)	19,000 [5.6]	13,500 [4.0]	5,500 [1.6]	13.55	16.00	74	650 [307]
	RCQD-2417 (-GFE-06?MCK?)	19,500 [5.7]	14,400 [4.2]	5,100 [1.5]	13.00	16.00	74	575 [271]
	RCQD-2417 (-GFE-07?MCK?)	19,600 [5.7]	14,550 [4.3]	5,050 [1.5]	13.00	16.00	74	600 [283]
	RCQD-2417 (-GJF-06?MCK?)	19,800 [5.8]	14,800 [4.3]	5,000 [1.5]	13.00	16.00	74	625 [295]
	RCQD-2417 (-GJF-07?MCK?)	19,500 [5.7]	14,400 [4.2]	5,100 [1.5]	13.00	16.00	74	575 [271]
	RCQD-2417 (-GPE-05?BMK?)	19,500 [5.7]	14,400 [4.2]	5,100 [1.5]	13.00	16.00	74	575 [271]
	RCQD-2417 (-GPE-07?AMK?)	19,800 [5.8]	14,800 [4.3]	5,000 [1.5]	13.00	16.00	74	625 [295]
	RCQD-2417 (RGPT-05?BMK?)	19,800 [5.8]	14,900 [4.4]	4,900 [1.4]	13.00	16.00	74	650 [307]
	RCQD-2417 (RGPT-07?AME?)	19,900 [5.8]	15,000 [4.4]	4,900 [1.4]	13.00	16.00	74	675 [319]
	RCQD-2417 (-GRM-04?MAE?)	19,800 [5.8]	14,850 [4.4]	4,950 [1.5]	13.00	16.50	74	575 [271]
	RCQD-2417 (-GRM-06?MAE?)	19,900 [5.8]	15,000 [4.4]	4,900 [1.4]	13.00	16.00	74	600 [283]
018JAZ	RCQD-2417 (-GRM-07?MAE?)	20,200 [5.9]	15,400 [4.5]	4,800 [1.4]	13.00	16.00	74	625 [295]
	ROCA-070E03 (RCQD-2417)	19,600 [5.7]	14,600 [4.3]	5,000 [1.5]	13.00	16.00	74	600 [283]
	ROLA-070E03 (RCQD-2417)	19,600 [5.7]	14,600 [4.3]	5,000 [1.5]	13.00	16.00	74	600 [283]
	RCQD-2417A* (-GFD-06?MCK?)	19,100 [5.6]	13,850 [4.1]	5,250 [1.5]	13.65	16.00	74	600 [283]
	RCQD-2417A* (-GFD-07?MCK?)	19,100 [5.6]	13,850 [4.1]	5,250 [1.5]	13.65	16.00	74	600 [283]
	RCQD-2417A* (-GJD-06?MCK?)	19,100 [5.6]	13,850 [4.1]	5,250 [1.5]	13.80	16.00	74	600 [283]
	RCQD-2417A* (-GJD-07?MCK?)	19,400 [5.7]	14,250 [4.2]	5,150 [1.5]	13.95	16.00	74	625 [295]
	RCQD-2417A* (-GPR-05?BMK?)	19,100 [5.6]	13,850 [4.1]	5,250 [1.5]	13.55	16.00	74	600 [283]
	RCQD-2417A* (-GPR-07?AMK?)	19,100 [5.6]	13,850 [4.1]	5,250 [1.5]	13.80	16.00	74	600 [283]
	RCQD-2417A*+RXMD-C04	18,800 [5.5]	13,800 [4.0]	5,000 [1.5]	12.15	14.50	74	650 [307]
	-HKL-HM2417 (RCSL-H*2417)	19,400 [5.7]	14,250 [4.2]	5,150 [1.5]	13.80	16.00	74	650 [307]
	-HLL-HM2417 (RCSL-H*2417)	19,400 [5.7]	14,250 [4.2]	5,150 [1.5]	13.85	16.00	74	650 [307]
	-HSL-HM1817 (RCSL-H*2417)	18,800 [5.5]	13,650 [4.0]	5,150 [1.5]	12.65	15.00	74	600 [283]
	RCFL-H*2417+RXMD-C04 ①	25,000 [7.3]	18,450 [5.4]	6,550 [1.9]	12.55	14.50	73	800 [378]
	RCFL-A*2414+RXMD-C04	25,000 [7.3]	18,450 [5.4]	6,550 [1.9]	12.55	14.50	73	800 [378]
	RCFL-A*2417 (-GFD-06?MCK?)	25,200 [7.4]	18,600 [5.4]	6,600 [1.9]	13.40	15.10	73	800 [378]
	RCFL-A*2417 (-GFD-07?MCK?)	25,200 [7.4]	18,600 [5.4]	6,600 [1.9]	13.50	15.50	73	800 [378]
	RCFL-A*2417 (-GFE-06?MCK?)	25,200 [7.4]	18,550 [5.4]	6,650 [1.9]	13.00	15.50	73	800 [378]
	RCFL-A*2417 (-GFE-07?MCK?)	25,200 [7.4]	18,550 [5.4]	6,650 [1.9]	13.00	15.50	73	825 [389]
	RCFL-A*2417 (-GGD-06?MCK?)	25,400 [7.4]	18,750 [5.5]	6,650 [1.9]	13.70	15.50	73	800 [378]
	RCFL-A*2417 (-GGD-07?MCK?)	25,400 [7.4]	18,750 [5.5]	6,650 [1.9]	13.60	15.50	73	800 [378]
	RCFL-A*2417 (-GGE-06?MCK?)	25,400 [7.4]	18,700 [5.5]	6,700 [2.0]	13.00	16.00	73	825 [389]
	RCFL-A*2417 (-GGE-07?MCK?)	25,200 [7.4]	18,500 [5.4]	6,700 [2.0]	13.00	15.50	73	800 [378]
	RCFL-A*2417 (-GLE-07?AMK?)	25,400 [7.4]	18,700 [5.5]	6,700 [2.0]	13.00	16.00	73	800 [378]
	RCFL-A*2417 (-GLR-07?AMK?)	25,400 [7.4]	18,750 [5.5]	6,650 [1.9]	13.90	16.00	73	800 [378]
	RCFL-A*2417 (RGLT-07?AME?)	25,600 [7.5]	19,100 [5.6]	6,500 [1.9]	13.00	16.00	73	850 [401]
024JAZ	RCFL-A*2417 (-GPE-05?BMK?)	25,200 [7.4]	18,500 [5.4]	6,700 [2.0]	13.00	15.50	73	800 [378]
	RCFL-A*2417 (-GPE-07?AMK?)	25,000 [7.3]	18,100 [5.3]	6,900 [2.0]	13.00	16.00	73	725 [342]
	RCFL-A*2417 (-GPR-05?BMK?)	25,200 [7.4]	18,550 [5.4]	6,650 [1.9]	13.50	15.50	73	775 [366]
	RCFL-A*2417 (-GPR-07?AMK?)	25,000 [7.3]	18,150 [5.3]	6,850 [2.0]	13.00	16.00	73	750 [354]
	RCFL-A*2417 (RGPT-05?BMK?)	25,400 [7.4]	18,950 [5.6]	6,450 [1.9]	13.00	15.50	73	850 [401]
	RCFL-A*2417 (RGPT-07?AME?)	25,600 [7.5]	19,100 [5.6]	6,500 [1.9]	13.00	15.50	73	850 [401]
	RCFL-A*2417 (-GRM-04?MAE?)	25,200 [7.4]	18,600 [5.4]	6,600 [1.9]	13.45	15.50	73	800 [378]
	RCFL-A*2417 (-GRM-06?MAE?)	25,200 [7.4]	18,600 [5.4]	6,600 [1.9]	13.45	15.50	73	825 [389]
	RCFL-A*2417 (-GRM-07?MAE?)	25,400 [7.4]	18,950 [5.6]	6,450 [1.9]	13.20	15.10	73	850 [401]
	ROCA-070E03 (RCFL-A*2417)	25,400 [7.4]	18,750 [5.5]	6,650 [1.9]	13.00	16.00	73	800 [378]
	ROCA-070E04 (RCFL-A*2417)	25,400 [7.4]	18,750 [5.5]	6,650 [1.9]	13.00	16.00	73	800 [378]
	ROLA-070E03 (RCFL-A*2417)	25,400 [7.4]	18,750 [5.5]	6,650 [1.9]	13.00	16.00	73	800 [378]
	ROLA-070E04 (RCFL-A*2417)	25,800 [7.6]	19,450 [5.7]	6,350 [1.9]	13.00	15.50	73	900 [425]
	RCFL-A*2417+RXMD-C04	25,000 [7.3]	18,450 [5.4]	6,550 [1.9]	12.55	14.50	73	800 [378]
	RCFL-H*2414+RXMD-C04	25,000 [7.3]	18,450 [5.4]	6,550 [1.9]	12.55	14.50	73	800 [378]

① Highest sales volume tested combination required by D.O.E. test procedures.

[ ] Designates Metric Conversions

Performance Data @ AHRI Standard Conditions—Cooling: UAPM- JAZ (continued)

Model Numbers		80°F [26.5°C] DB/67°F [19.5°C] WB Indoor Air 95°F [35°C] DB Outdoor Air					Sound Rating dB	Indoor CFM [L/s]
Outdoor Unit UAPM-	Indoor Coil and/or Air Handler	Total Capacity BTU/H [kW]	Net Sensible BTU/H [kW]	Net Latent BTU/H [kW]	EER	SEER		
Rev. 6/30/10	RCFL-H*2417 (-GFD-06?MCK?)	25,200 [7.4]	18,600 [5.4]	6,600 [1.9]	13.40	15.10	73	800 [378]
	RCFL-H*2417 (-GFD-07?MCK?)	25,200 [7.4]	18,600 [5.4]	6,600 [1.9]	13.50	15.50	73	800 [378]
	RCFL-H*2417 (-GFE-06?MCK?)	25,200 [7.4]	18,550 [5.4]	6,650 [1.9]	13.00	15.50	73	800 [378]
	RCFL-H*2417 (-GFE-07?MCK?)	25,200 [7.4]	18,550 [5.4]	6,650 [1.9]	13.00	15.50	73	825 [389]
	RCFL-H*2417 (-GGD-06?MCK?)	25,400 [7.4]	18,750 [5.5]	6,650 [1.9]	13.70	15.50	73	800 [378]
	RCFL-H*2417 (-GGD-07?MCK?)	25,400 [7.4]	18,750 [5.5]	6,650 [1.9]	13.60	15.50	73	800 [378]
	RCFL-H*2417 (-GGE-06?MCK?)	25,400 [7.4]	18,700 [5.5]	6,700 [2.0]	13.00	16.00	73	825 [389]
	RCFL-H*2417 (-GGE-07?MCK?)	25,200 [7.4]	18,500 [5.4]	6,700 [2.0]	13.00	15.50	73	800 [378]
	RCFL-H*2417 (-GJD-06?MCK?)	25,400 [7.4]	18,750 [5.5]	6,650 [1.9]	13.70	15.50	73	800 [378]
	RCFL-H*2417 (-GJD-07?MCK?)	25,400 [7.4]	18,750 [5.5]	6,650 [1.9]	13.60	15.50	73	800 [378]
	RCFL-H*2417 (-GJF-06?MCK?)	25,400 [7.4]	18,700 [5.5]	6,700 [2.0]	13.00	16.00	73	825 [389]
	RCFL-H*2417 (-GJF-07?MCK?)	25,200 [7.4]	18,500 [5.4]	6,700 [2.0]	13.00	15.50	73	800 [378]
	RCFL-H*2417 (-GLE-07?AMK?)	25,400 [7.4]	18,700 [5.5]	6,700 [2.0]	13.00	16.00	73	800 [378]
	RCFL-H*2417 (-GLR-07?AMK?)	25,400 [7.4]	18,750 [5.5]	6,650 [1.9]	13.90	16.00	73	800 [378]
	RCFL-H*2417 (RGLT-07?AME?)	25,600 [7.5]	19,100 [5.6]	6,500 [1.9]	13.00	16.00	73	850 [401]
	RCFL-H*2417 (-GPE-05?BMK?)	25,200 [7.4]	18,500 [5.4]	6,700 [2.0]	13.00	15.50	73	800 [378]
	RCFL-H*2417 (-GPE-07?AMK?)	25,000 [7.3]	18,100 [5.3]	6,900 [2.0]	13.00	16.00	73	725 [342]
	RCFL-H*2417 (-GPR-05?BMK?)	25,200 [7.4]	18,550 [5.4]	6,650 [1.9]	13.50	15.50	73	775 [366]
	RCFL-H*2417 (-GPR-07?AMK?)	25,000 [7.3]	18,150 [5.3]	6,850 [2.0]	13.00	16.00	73	750 [354]
	RCFL-H*2417 (RGPT-05?BMK?)	25,400 [7.4]	18,950 [5.6]	6,450 [1.9]	13.00	15.50	73	850 [401]
	RCFL-H*2417 (RGPT-07?AME?)	25,600 [7.5]	19,100 [5.6]	6,500 [1.9]	13.00	15.50	73	850 [401]
	RCFL-H*2417 (-GRM-04?MAE?)	25,200 [7.4]	18,600 [5.4]	6,600 [1.9]	13.45	15.50	73	800 [378]
	RCFL-H*2417 (-GRM-06?MAE?)	25,200 [7.4]	18,600 [5.4]	6,600 [1.9]	13.45	15.50	73	825 [389]
	RCFL-H*2417 (-GRM-07?MAE?)	25,400 [7.4]	18,950 [5.6]	6,450 [1.9]	13.20	15.10	73	850 [401]
	RCFL-H*2417 (-GTM-06?MAE?)	25,200 [7.4]	18,400 [5.4]	6,800 [2.0]	13.00	16.00	73	750 [354]
	ROCA-070E03 (RCFL-H*2417)	25,400 [7.4]	18,750 [5.5]	6,650 [1.9]	13.00	16.00	73	800 [378]
024JAZ	ROCA-070E04 (RCFL-H*2417)	25,400 [7.4]	18,750 [5.5]	6,650 [1.9]	13.00	16.00	73	800 [378]
	ROLA-070E03 (RCFL-H*2417)	25,400 [7.4]	18,750 [5.5]	6,650 [1.9]	13.00	16.00	73	800 [378]
	ROLA-070E04 (RCFL-H*2417)	25,800 [7.6]	19,450 [5.7]	6,350 [1.9]	13.00	15.50	73	900 [425]
	-BHP-17 (RCHL-24A2)	23,200 [6.8]	16,550 [4.8]	6,650 [1.9]	12.15	14.00	73	800 [378]
	RCQD-2417 (-GFE-06?MCK?)	24,600 [7.2]	18,600 [5.4]	6,000 [1.8]	12.50	15.00	73	800 [378]
	RCQD-2417 (-GFE-07?MCK?)	24,600 [7.2]	18,600 [5.4]	6,000 [1.8]	12.50	15.00	73	825 [389]
	RCQD-2417 (-GJF-06?MCK?)	24,600 [7.2]	18,550 [5.4]	6,050 [1.8]	12.50	15.00	73	825 [389]
	RCQD-2417 (-GJF-07?MCK?)	24,600 [7.2]	18,600 [5.4]	6,000 [1.8]	12.50	15.00	73	800 [378]
	RCQD-2417 (-GPE-05?BMK?)	24,600 [7.2]	18,600 [5.4]	6,000 [1.8]	12.50	15.00	73	800 [378]
	RCQD-2417 (-GPE-07?AMK?)	24,600 [7.2]	18,600 [5.4]	6,000 [1.8]	12.50	15.00	73	825 [389]
	RCQD-2417 (RGPT-05?BMK?)	25,000 [7.3]	19,350 [5.7]	5,650 [1.7]	12.50	15.00	73	900 [425]
	RCQD-2417 (-GRM-04?MAE?)	25,600 [7.5]	20,050 [5.9]	5,550 [1.6]	13.65	15.50	73	800 [378]
	RCQD-2417 (-GRM-06?MAE?)	25,600 [7.5]	20,050 [5.9]	5,550 [1.6]	13.65	15.50	73	825 [389]
	RCQD-2417 (-GRM-07?MAE?)	25,800 [7.6]	20,400 [6.0]	5,400 [1.6]	13.45	15.00	73	850 [401]
	ROCA-070E03 (RCQD-2417)	24,600 [7.2]	18,600 [5.4]	6,000 [1.8]	12.50	15.10	73	800 [378]
	ROCA-070E04 (RCQD-2417)	24,600 [7.2]	18,600 [5.4]	6,000 [1.8]	12.50	15.10	73	800 [378]
	ROLA-070E03 (RCQD-2417)	24,600 [7.2]	18,650 [5.5]	5,950 [1.7]	12.50	15.10	73	800 [378]
	ROLA-070E04 (RCQD-2417)	25,000 [7.3]	19,350 [5.7]	5,650 [1.7]	12.50	15.10	73	900 [425]
	RCQD-2417A*	24,800 [7.3]	18,750 [5.5]	6,050 [1.8]	12.05	14.00	73	800 [378]
	RCQD-2417A* (-GFD-06?MCK?)	24,400 [7.1]	18,450 [5.4]	5,950 [1.7]	12.60	14.50	73	800 [378]
	RCQD-2417A* (-GFD-07?MCK?)	24,400 [7.1]	18,450 [5.4]	5,950 [1.7]	12.70	15.00	73	800 [378]
	RCQD-2417A* (-GJD-06?MCK?)	24,600 [7.2]	18,650 [5.5]	5,950 [1.7]	12.90	15.00	73	800 [378]
	RCQD-2417A* (-GJD-07?MCK?)	24,600 [7.2]	18,650 [5.5]	5,950 [1.7]	12.80	15.00	73	800 [378]
	RCQD-2417A* (-GPR-05?BMK?)	24,400 [7.1]	18,400 [5.4]	6,000 [1.8]	12.65	14.50	73	775 [366]
	RCQD-2417A* (-GPR-07?AMK?)	24,600 [7.2]	18,650 [5.5]	5,950 [1.7]	13.00	15.00	73	800 [378]
	-HKL-HM2417 (RCSL-H*2417)	25,600 [7.5]	19,100 [5.6]	6,500 [1.9]	13.85	16.00	73	850 [401]
	-HLL-HM2417 (RCSL-H*2417)	25,600 [7.5]	18,900 [5.5]	6,700 [2.0]	14.25	16.00	73	775 [366]
	-HSL-HM2417 (RCSL-H*2417)	25,000 [7.3]	18,450 [5.4]	6,550 [1.9]	12.95	14.50	73	800 [378]

① Highest sales volume tested combination required by D.O.E. test procedures.

[ ] Designates Metric Conversions

Performance Data @ AHRI Standard Conditions—Cooling: UAPM- JAZ (continued)

Model Numbers		80°F [26.5°C] DB/67°F [19.5°C] WB Indoor Air 95°F [35°C] DB Outdoor Air					Sound Rating dB	Indoor CFM [L/s]
Outdoor Unit UAPM-	Indoor Coil and/or Air Handler	Total Capacity BTU/H [kW]	Net Sensible BTU/H [kW]	Net Latent BTU/H [kW]	EER	SEER		
Rev. 6/30/10	RCFL-H*3617+RXMD-C04 ①	29,000 [8.5]	20,950 [6.1]	8,050 [2.4]	12.55	14.60	73	1,000 [472]
	RCFL-A*3617 (-GFD-06?MCK?)	29,200 [8.6]	21,100 [6.2]	8,100 [2.4]	12.55	14.50	73	1,000 [472]
	RCFL-A*3617 (-GFD-07?MCK?)	29,400 [8.6]	21,250 [6.2]	8,150 [2.4]	13.10	15.10	73	1,000 [472]
	RCFL-A*3617 (-GFE-06?MCK?)	29,200 [8.6]	21,100 [6.2]	8,100 [2.4]	13.00	15.00	73	1,000 [472]
	RCFL-A*3617 (-GFE-07?MCK?)	29,200 [8.6]	21,150 [6.2]	8,050 [2.4]	12.50	14.50	73	1,025 [484]
	RCFL-A*3617 (-GGD-06?MCK?)	29,400 [8.6]	21,250 [6.2]	8,150 [2.4]	13.15	15.10	73	1,000 [472]
	RCFL-A*3617 (-GGD-07?MCK?)	29,400 [8.6]	21,250 [6.2]	8,150 [2.4]	13.05	15.00	73	1,025 [484]
	RCFL-A*3617 (-GGE-06?MCK?)	29,400 [8.6]	21,300 [6.2]	8,100 [2.4]	13.00	15.10	73	1,025 [484]
	RCFL-A*3617 (-GGE-07?MCK?)	29,400 [8.6]	21,300 [6.2]	8,100 [2.4]	13.00	15.10	73	1,025 [484]
	RCFL-A*3617 (-GLE-07?AMK?)	29,400 [8.6]	21,300 [6.2]	8,100 [2.4]	13.00	15.50	73	1,025 [484]
	RCFL-A*3617 (-GLR-07?AMK?)	29,400 [8.6]	21,200 [6.2]	8,200 [2.4]	13.45	15.50	73	1,025 [484]
	RCFL-A*3617 (RGLT-07?AME?)	29,000 [8.5]	20,350 [6.0]	8,650 [2.5]	13.00	16.00	73	875 [413]
	RCFL-A*3617 (-GPE-05?BMK?)	29,400 [8.6]	21,300 [6.2]	8,100 [2.4]	13.00	15.10	73	975 [460]
	RCFL-A*3617 (-GPE-07?AMK?)	29,400 [8.6]	21,300 [6.2]	8,100 [2.4]	13.00	15.10	73	1,000 [472]
	RCFL-A*3617 (-GPR-05?BMK?)	29,200 [8.6]	21,050 [6.2]	8,150 [2.4]	13.00	15.00	73	1,000 [472]
	RCFL-A*3617 (-GPR-07?AMK?)	29,400 [8.6]	21,200 [6.2]	8,200 [2.4]	13.40	15.10	73	1,000 [472]
	RCFL-A*3617 (RGPT-05?BMK?)	28,800 [8.4]	20,100 [5.9]	8,700 [2.5]	13.00	15.50	73	850 [401]
	RCFL-A*3617 (RGPT-07?AME?)	29,000 [8.5]	20,350 [6.0]	8,650 [2.5]	13.00	15.50	73	875 [413]
	RCFL-A*3617 (-GRM-04?MAE?)	29,200 [8.6]	21,100 [6.2]	8,100 [2.4]	12.85	14.50	73	1,025 [484]
	RCFL-A*3617 (-GRM-06?MAE?)	28,800 [8.4]	20,000 [5.9]	8,800 [2.6]	13.45	15.50	73	825 [389]
	RCFL-A*3617 (-GRM-07?MAE?)	28,800 [8.4]	20,100 [5.9]	8,700 [2.5]	13.20	15.10	73	850 [401]
	RCFL-A*3617 (-GTM-06?MAE?)	29,000 [8.5]	20,450 [6.0]	8,550 [2.5]	13.00	15.50	73	900 [425]
	ROCA-070E03 (RCFL-A*3617)	29,600 [8.7]	21,400 [6.3]	8,200 [2.4]	13.00	15.50	73	1,000 [472]
	ROCA-070E04 (RCFL-A*3617)	29,600 [8.7]	21,400 [6.3]	8,200 [2.4]	13.00	15.50	73	1,000 [472]
	ROLA-070E03 (RCFL-A*3617)	29,600 [8.7]	21,400 [6.3]	8,200 [2.4]	13.00	15.50	73	975 [460]
	ROLA-070E04 (RCFL-A*3617)	29,600 [8.7]	21,400 [6.3]	8,200 [2.4]	13.00	15.50	73	1,025 [484]
030JAZ	RCFL-A*3617+RXMD-C04	29,000 [8.5]	20,950 [6.1]	8,050 [2.4]	12.55	14.50	73	1,000 [472]
	RCFL-A*3621 (-GFD-06?MCK?)	29,200 [8.6]	21,100 [6.2]	8,100 [2.4]	12.55	14.50	73	1,000 [472]
	RCFL-A*3621 (-GFD-07?MCK?)	29,400 [8.6]	21,250 [6.2]	8,150 [2.4]	13.15	15.10	73	1,000 [472]
	RCFL-A*3621 (-GFD-09?ZCM?)	29,000 [8.5]	20,300 [5.9]	8,700 [2.5]	13.00	15.50	73	850 [401]
	RCFL-A*3621 (-GFE-06?MCK?)	29,400 [8.6]	21,300 [6.2]	8,100 [2.4]	13.00	15.10	73	1,000 [472]
	RCFL-A*3621 (-GFE-07?MCK?)	29,200 [8.6]	21,150 [6.2]	8,050 [2.4]	13.00	15.00	73	1,025 [484]
	RCFL-A*3621 (-GFE-09?ZCM?)	29,600 [8.7]	21,450 [6.3]	8,150 [2.4]	13.00	15.50	73	975 [460]
	RCFL-A*3621 (-GFE-10?ZCM?)	29,600 [8.7]	21,450 [6.3]	8,150 [2.4]	13.00	15.50	73	1,000 [472]
	RCFL-A*3621 (-GGD-06?MCK?)	29,400 [8.6]	21,250 [6.2]	8,150 [2.4]	13.25	15.10	73	1,000 [472]
	RCFL-A*3621 (-GGD-07?MCK?)	29,400 [8.6]	21,250 [6.2]	8,150 [2.4]	13.10	15.10	73	1,025 [484]
	RCFL-A*3621 (-GGE-06?MCK?)	29,400 [8.6]	21,300 [6.2]	8,100 [2.4]	13.00	15.10	73	1,025 [484]
	RCFL-A*3621 (-GGE-07?MCK?)	29,400 [8.6]	21,300 [6.2]	8,100 [2.4]	13.00	15.10	73	1,025 [484]
	RCFL-A*3621 (-GGE-09?ZCM?)	29,600 [8.7]	21,450 [6.3]	8,150 [2.4]	13.00	15.50	73	1,000 [472]
	RCFL-A*3621 (-GGE-10?ZCM?)	29,600 [8.7]	21,450 [6.3]	8,150 [2.4]	13.00	15.50	73	1,000 [472]
	RCFL-A*3621 (-GLE-07?AMK?)	29,400 [8.6]	21,250 [6.2]	8,150 [2.4]	13.00	15.50	73	1,025 [484]
	RCFL-A*3621 (RGLE-07?BRQ?)	29,400 [8.6]	20,900 [6.1]	8,500 [2.5]	13.00	16.00	73	925 [437]
	RCFL-A*3621 (-GLE-10?BRM?)	29,800 [8.7]	21,800 [6.4]	8,000 [2.3]	13.00	16.00	73	1,050 [495]
	RCFL-A*3621 (-GLR-07?AMK?)	29,600 [8.7]	21,400 [6.3]	8,200 [2.4]	13.50	15.50	73	1,025 [484]
	RCFL-A*3621 (-GLR-07?BRQ?)	29,600 [8.7]	21,350 [6.3]	8,250 [2.4]	13.85	16.00	73	1,000 [472]
	RCFL-A*3621 (RGLT-07?AME?)	29,200 [8.6]	20,500 [6.0]	8,700 [2.5]	13.00	16.00	73	875 [413]
	RCFL-A*3621 (RGLT-07?BRQ?)	29,800 [8.7]	21,550 [6.3]	8,250 [2.4]	13.00	16.00	73	975 [460]
	RCFL-A*3621 (RGLT-10?BRM?)	29,800 [8.7]	21,550 [6.3]	8,250 [2.4]	13.00	16.00	73	975 [460]
	RCFL-A*3621 (-GPE-05?BMK?)	29,400 [8.6]	21,300 [6.2]	8,100 [2.4]	13.00	15.10	73	975 [460]
	RCFL-A*3621 (-GPE-07?AMK?)	29,400 [8.6]	21,250 [6.2]	8,150 [2.4]	13.00	15.50	73	1,000 [472]
	RCFL-A*3621 (-GPE-07?BRQ?)	29,600 [8.7]	21,450 [6.3]	8,150 [2.4]	13.00	16.00	73	1,025 [484]
	RCFL-A*3621 (-GPE-10?BRM?)	30,000 [8.8]	22,100 [6.5]	7,900 [2.3]	13.00	16.00	73	1,075 [507]
	RCFL-A*3621 (-GPR-05?BMK?)	29,400 [8.6]	21,250 [6.2]	8,150 [2.4]	13.10	15.10	73	1,000 [472]

① Highest sales volume tested combination required by D.O.E. test procedures.

[ ] Designates Metric Conversions

Performance Data @ AHRI Standard Conditions—Cooling: UAPM- JAZ (continued)

Model Numbers		80°F [26.5°C] DB/67°F [19.5°C] WB Indoor Air 95°F [35°C] DB Outdoor Air					Sound Rating dB	Indoor CFM [L/s]
Outdoor Unit UAPM-	Indoor Coil and/or Air Handler	Total Capacity BTU/H [kW]	Net Sensible BTU/H [kW]	Net Latent BTU/H [kW]	EER	SEER		
Rev. 6/30/10	RCFL-A*3621 (-GPR-07?AMK?)	29,400 [8.6]	21,200 [6.2]	8,200 [2.4]	13.45	15.50	73	1,000 [472]
	RCFL-A*3621 (-GPR-07?BRQ?)	29,800 [8.7]	21,550 [6.3]	8,250 [2.4]	13.90	16.00	73	1,000 [472]
	RCFL-A*3621 (RGPT-05?BMK?)	29,000 [8.5]	20,350 [6.0]	8,650 [2.5]	13.00	15.50	73	875 [413]
	RCFL-A*3621 (RGPT-07?AME?)	29,000 [8.5]	20,300 [5.9]	8,700 [2.5]	13.00	16.00	73	875 [413]
	RCFL-A*3621 (RGPT-10?BRM?)	29,800 [8.7]	21,550 [6.3]	8,250 [2.4]	13.00	16.00	73	975 [460]
	RCFL-A*3621 (-GRM-04?MAE?)	29,200 [8.6]	21,100 [6.2]	8,100 [2.4]	12.90	14.50	73	1,025 [484]
	RCFL-A*3621 (-GRM-06?MAE?)	28,800 [8.4]	20,000 [5.9]	8,800 [2.6]	13.50	15.50	73	825 [389]
	RCFL-A*3621 (-GRM-07?MAE?)	28,800 [8.4]	20,100 [5.9]	8,700 [2.5]	13.25	15.10	73	850 [401]
	RCFL-A*3621 (-GRM-07?YBG?)	29,200 [8.6]	21,100 [6.2]	8,100 [2.4]	12.85	14.50	73	975 [460]
	RCFL-A*3621 (-GRM-09?ZAJ?)	29,200 [8.6]	20,900 [6.1]	8,300 [2.4]	13.00	15.50	73	950 [448]
	RCFL-A*3621 (-GRM-10?ZAJ?)	29,400 [8.6]	21,300 [6.2]	8,100 [2.4]	13.00	15.10	73	1,025 [484]
	RCFL-A*3621 (-GTM-06?MAE?)	29,000 [8.5]	20,450 [6.0]	8,550 [2.5]	13.00	15.50	73	900 [425]
	RCFL-A*3621 (-GTM-07?RBG?)	29,400 [8.6]	21,000 [6.2]	8,400 [2.5]	13.00	15.50	73	950 [448]
	RCFL-A*3621 (-GTM-09?ZAJ?)	29,600 [8.7]	21,400 [6.3]	8,200 [2.4]	13.00	16.00	73	975 [460]
	ROCA-070E03 (RCFL-A*3621)	29,600 [8.7]	21,400 [6.3]	8,200 [2.4]	13.00	15.50	73	1,000 [472]
	ROCA-070E04 (RCFL-A*3621)	29,600 [8.7]	21,400 [6.3]	8,200 [2.4]	13.00	15.50	73	1,000 [472]
	ROLA-070E03 (RCFL-A*3621)	29,200 [8.6]	20,600 [6.0]	8,600 [2.5]	13.00	16.00	73	900 [425]
	ROLA-070E04 (RCFL-A*3621)	29,200 [8.6]	20,600 [6.0]	8,600 [2.5]	13.00	16.00	73	900 [425]
	ROLA-115E05 (RCFL-A*3621)	29,200 [8.6]	20,600 [6.0]	8,600 [2.5]	13.00	16.00	73	900 [425]
	RCFL-A*3621+RXMD-C04	29,000 [8.5]	20,950 [6.1]	8,050 [2.4]	12.55	14.50	73	1,000 [472]
	RCFL-A*3821 (RGLT-07?AME?)	30,000 [8.8]	21,750 [6.4]	8,250 [2.4]	13.00	16.00	73	925 [437]
	RCFL-A*3821 (RGLT-07?BRQ?)	30,600 [9.0]	22,700 [6.7]	7,900 [2.3]	13.00	16.00	73	1,025 [484]
	RCFL-A*3821 (RGLT-10?BRM?)	30,600 [9.0]	22,700 [6.7]	7,900 [2.3]	13.00	16.00	73	1,025 [484]
	RCFL-A*3821 (RGPT-05?BMK?)	29,800 [8.7]	21,450 [6.3]	8,350 [2.4]	13.00	15.50	73	900 [425]
	RCFL-A*3821 (RGPT-07?AME?)	30,000 [8.8]	21,750 [6.4]	8,250 [2.4]	13.00	16.00	73	925 [437]
	RCFL-A*3821 (RGPT-07?BRQ?)	30,600 [9.0]	22,700 [6.7]	7,900 [2.3]	13.00	16.00	73	1,025 [484]
030JAZ	RCFL-A*3821 (RGPT-10?BRM?)	30,600 [9.0]	22,700 [6.7]	7,900 [2.3]	13.00	16.00	73	1,025 [484]
	ROCA-070E03 (RCFL-A*3821)	30,200 [8.8]	22,200 [6.5]	8,000 [2.3]	13.00	15.50	73	1,000 [472]
	ROCA-070E04 (RCFL-A*3821)	30,200 [8.8]	22,200 [6.5]	8,000 [2.3]	13.00	15.50	73	1,000 [472]
	ROLA-070E03 (RCFL-A*3821)	30,200 [8.8]	22,200 [6.5]	8,000 [2.3]	13.00	16.00	73	975 [460]
	ROLA-070E04 (RCFL-A*3821)	30,400 [8.9]	22,550 [6.6]	7,850 [2.3]	13.00	16.00	73	1,025 [484]
	ROLA-115E05 (RCFL-A*3821)	30,600 [9.0]	22,800 [6.7]	7,800 [2.3]	13.00	16.00	73	1,050 [495]
	RCFL-A*3824 (RGLT-07?BRQ?)	30,600 [9.0]	22,700 [6.7]	7,900 [2.3]	13.00	16.00	73	1,025 [484]
	RCFL-A*3824 (RGLT-10?BRM?)	30,600 [9.0]	22,700 [6.7]	7,900 [2.3]	13.00	16.00	73	1,025 [484]
	RCFL-A*3824 (RGLT-12?ARM?)	30,400 [8.9]	22,350 [6.5]	8,050 [2.4]	13.00	16.00	73	975 [460]
	RCFL-A*3824 (RGPT-07?BRQ?)	30,600 [9.0]	22,700 [6.7]	7,900 [2.3]	13.00	16.00	73	1,025 [484]
	RCFL-A*3824 (RGPT-10?BRM?)	30,600 [9.0]	22,700 [6.7]	7,900 [2.3]	13.00	16.00	73	1,025 [484]
	RCFL-A*3824 (RGPT-12?ARM?)	30,400 [8.9]	22,350 [6.5]	8,050 [2.4]	13.00	16.00	73	975 [460]
	ROCA-070E03 (RCFL-A*3824)	30,200 [8.8]	22,200 [6.5]	8,000 [2.3]	13.00	15.50	73	1,000 [472]
	ROCA-070E04 (RCFL-A*3824)	30,200 [8.8]	22,200 [6.5]	8,000 [2.3]	13.00	15.50	73	1,000 [472]
	ROLA-070E03 (RCFL-A*3824)	30,200 [8.8]	22,200 [6.5]	8,000 [2.3]	13.00	16.00	73	975 [460]
	ROLA-070E04 (RCFL-A*3824)	30,200 [8.8]	22,200 [6.5]	8,000 [2.3]	13.00	16.00	73	975 [460]
	ROLA-115E05 (RCFL-A*3824)	29,800 [8.7]	21,450 [6.3]	8,350 [2.4]	13.00	16.00	73	900 [425]
	RCFL-H*3617 (-GFD-06?MCK?)	29,200 [8.6]	21,100 [6.2]	8,100 [2.4]	12.55	14.50	73	1,000 [472]
	RCFL-H*3617 (-GFD-07?MCK?)	29,400 [8.6]	21,250 [6.2]	8,150 [2.4]	13.10	15.10	73	1,000 [472]
	RCFL-H*3617 (-GFE-06?MCK?)	29,200 [8.6]	21,100 [6.2]	8,100 [2.4]	13.00	15.00	73	1,000 [472]
	RCFL-H*3617 (-GFE-07?MCK?)	29,200 [8.6]	21,150 [6.2]	8,050 [2.4]	12.50	14.50	73	1,025 [484]
	RCFL-H*3617 (-GGD-06?MCK?)	29,400 [8.6]	21,250 [6.2]	8,150 [2.4]	13.15	15.10	73	1,000 [472]
	RCFL-H*3617 (-GGD-07?MCK?)	29,400 [8.6]	21,250 [6.2]	8,150 [2.4]	13.05	15.00	73	1,025 [484]
	RCFL-H*3617 (-GGE-06?MCK?)	29,400 [8.6]	21,300 [6.2]	8,100 [2.4]	13.00	15.10	73	1,025 [484]
	RCFL-H*3617 (-GGE-07?MCK?)	29,400 [8.6]	21,300 [6.2]	8,100 [2.4]	13.00	15.10	73	1,025 [484]
	RCFL-H*3617 (-GJD-06?MCK?)	29,400 [8.6]	21,250 [6.2]	8,150 [2.4]	13.15	15.10	73	1,000 [472]
	RCFL-H*3617 (-GJD-07?MCK?)	29,400 [8.6]	21,250 [6.2]	8,150 [2.4]	13.05	15.00	73	1,025 [484]

① Highest sales volume tested combination required by D.O.E. test procedures.

[ ] Designates Metric Conversions

Performance Data @ AHRI Standard Conditions—Cooling: UAPM- JAZ (continued)

Model Numbers		80°F [26.5°C] DB/67°F [19.5°C] WB Indoor Air 95°F [35°C] DB Outdoor Air					Sound Rating dB	Indoor CFM [L/s]
Outdoor Unit UAPM-	Indoor Coil and/or Air Handler	Total Capacity BTU/H [kW]	Net Sensible BTU/H [kW]	Net Latent BTU/H [kW]	EER	SEER		
Rev. 6/30/10	RCFL-H*3617 (-GJF-06?MCK?)	29,400 [8.6]	21,300 [6.2]	8,100 [2.4]	13.00	15.10	73	1,025 [484]
	RCFL-H*3617 (-GJF-07?MCK?)	29,400 [8.6]	21,300 [6.2]	8,100 [2.4]	13.00	15.10	73	1,025 [484]
	RCFL-H*3617 (-GLE-07?AMK?)	29,400 [8.6]	21,300 [6.2]	8,100 [2.4]	13.00	15.50	73	1,025 [484]
	RCFL-H*3617 (UGLL-07?BRQ?)	29,600 [8.7]	21,350 [6.3]	8,250 [2.4]	13.80	16.00	73	1,000 [472]
	RCFL-H*3617 (-GLR-07?AMK?)	29,400 [8.6]	21,200 [6.2]	8,200 [2.4]	13.45	15.50	73	1,025 [484]
	RCFL-H*3617 (RGLT-07?AME?)	29,000 [8.5]	20,350 [6.0]	8,650 [2.5]	13.00	16.00	73	875 [413]
	RCFL-H*3617 (-GPE-07?AMK?)	29,400 [8.6]	21,300 [6.2]	8,100 [2.4]	13.00	15.10	73	1,000 [472]
	RCFL-H*3617 (-GPR-05?BMK?)	29,200 [8.6]	21,050 [6.2]	8,150 [2.4]	13.00	15.00	73	1,000 [472]
	RCFL-H*3617 (-GPR-07?AMK?)	29,400 [8.6]	21,200 [6.2]	8,200 [2.4]	13.40	15.10	73	1,000 [472]
	RCFL-H*3617 (RGPT-05?BMK?)	28,800 [8.4]	20,100 [5.9]	8,700 [2.5]	13.00	15.50	73	850 [401]
	RCFL-H*3617 (RGPT-07?AME?)	29,000 [8.5]	20,350 [6.0]	8,650 [2.5]	13.00	15.50	73	875 [413]
	RCFL-H*3617 (-GRM-04?MAE?)	29,200 [8.6]	21,100 [6.2]	8,100 [2.4]	12.85	14.50	73	1,025 [484]
	RCFL-H*3617 (-GRM-06?MAE?)	28,800 [8.4]	20,000 [5.9]	8,800 [2.6]	13.45	15.50	73	825 [389]
	RCFL-H*3617 (-GRM-07?MAE?)	28,800 [8.4]	20,100 [5.9]	8,700 [2.5]	13.20	15.10	73	850 [401]
	RCFL-H*3617 (-GTM-06?MAE?)	29,000 [8.5]	20,450 [6.0]	8,550 [2.5]	13.00	15.50	73	900 [425]
	ROCA-070E03 (RCFL-H*3617)	29,600 [8.7]	21,400 [6.3]	8,200 [2.4]	13.00	15.50	73	1,000 [472]
	ROCA-070E04 (RCFL-H*3617)	29,600 [8.7]	21,400 [6.3]	8,200 [2.4]	13.00	15.50	73	1,000 [472]
	ROLA-070E03 (RCFL-H*3617)	29,600 [8.7]	21,400 [6.3]	8,200 [2.4]	13.00	15.50	73	975 [460]
	ROLA-070E04 (RCFL-H*3617)	29,600 [8.7]	21,400 [6.3]	8,200 [2.4]	13.00	15.50	73	1,025 [484]
	RCFL-H*3621 (-GFD-06?MCK?)	29,200 [8.6]	21,100 [6.2]	8,100 [2.4]	12.55	14.50	73	1,000 [472]
	RCFL-H*3621 (-GFD-07?MCK?)	29,400 [8.6]	21,250 [6.2]	8,150 [2.4]	13.15	15.10	73	1,000 [472]
	RCFL-H*3621 (-GFD-09?ZCM?)	29,000 [8.5]	20,300 [5.9]	8,700 [2.5]	13.00	15.50	73	850 [401]
	RCFL-H*3621 (-GFE-06?MCK?)	29,400 [8.6]	21,300 [6.2]	8,100 [2.4]	13.00	15.10	73	1,000 [472]
	RCFL-H*3621 (-GFE-07?MCK?)	29,200 [8.6]	21,150 [6.2]	8,050 [2.4]	13.00	15.00	73	1,025 [484]
	RCFL-H*3621 (-GFE-09?ZCM?)	29,600 [8.7]	21,450 [6.3]	8,150 [2.4]	13.00	15.50	73	975 [460]
	RCFL-H*3621 (-GFE-10?ZCM?)	29,600 [8.7]	21,450 [6.3]	8,150 [2.4]	13.00	15.50	73	1,000 [472]
030JAZ	RCFL-H*3621 (-GGD-06?MCK?)	29,400 [8.6]	21,250 [6.2]	8,150 [2.4]	13.25	15.10	73	1,000 [472]
	RCFL-H*3621 (-GGD-07?MCK?)	29,400 [8.6]	21,250 [6.2]	8,150 [2.4]	13.05	15.10	73	1,025 [484]
	RCFL-H*3621 (-GGE-06?MCK?)	29,400 [8.6]	21,300 [6.2]	8,100 [2.4]	13.00	15.10	73	1,025 [484]
	RCFL-H*3621 (-GGE-07?MCK?)	29,400 [8.6]	21,300 [6.2]	8,100 [2.4]	13.00	15.10	73	1,025 [484]
	RCFL-H*3621 (-GGE-09?ZCM?)	29,600 [8.7]	21,450 [6.3]	8,150 [2.4]	13.00	15.50	73	1,000 [472]
	RCFL-H*3621 (-GGE-10?ZCM?)	29,600 [8.7]	21,450 [6.3]	8,150 [2.4]	13.00	15.50	73	1,000 [472]
	RCFL-H*3621 (-GJD-06?MCK?)	29,400 [8.6]	21,250 [6.2]	8,150 [2.4]	13.25	15.10	73	1,000 [472]
	RCFL-H*3621 (-GJD-07?MCK?)	29,400 [8.6]	21,250 [6.2]	8,150 [2.4]	13.10	15.10	73	1,025 [484]
	RCFL-H*3621 (-GJF-06?MCK?)	29,400 [8.6]	21,300 [6.2]	8,100 [2.4]	13.00	15.10	73	1,025 [484]
	RCFL-H*3621 (-GJF-07?MCK?)	29,400 [8.6]	21,300 [6.2]	8,100 [2.4]	13.00	15.10	73	1,025 [484]
	RCFL-H*3621 (-GJF-09?ZCM?)	29,600 [8.7]	21,450 [6.3]	8,150 [2.4]	13.00	15.50	73	1,000 [472]
	RCFL-H*3621 (-GJF-10?ZCM?)	29,600 [8.7]	21,450 [6.3]	8,150 [2.4]	13.00	15.50	73	1,000 [472]
	RCFL-H*3621 (-GLE-07?AMK?)	29,400 [8.6]	21,250 [6.2]	8,150 [2.4]	13.00	15.50	73	1,025 [484]
	RCFL-H*3621 (RGLE-07?BRQ?)	29,400 [8.6]	20,900 [6.1]	8,500 [2.5]	13.00	16.00	73	925 [437]
	RCFL-H*3621 (-GLE-10?BRM?)	29,800 [8.7]	21,800 [6.4]	8,000 [2.3]	13.00	16.00	73	1,050 [495]
	RCFL-H*3621 (UGLL-07?BRQ?)	29,600 [8.7]	21,350 [6.3]	8,250 [2.4]	13.85	16.00	73	1,000 [472]
	RCFL-H*3621 (-GLR-07?AMK?)	29,600 [8.7]	21,400 [6.3]	8,200 [2.4]	13.50	15.50	73	1,025 [484]
	RCFL-H*3621 (-GLR-07?BRQ?)	29,600 [8.7]	21,350 [6.3]	8,250 [2.4]	13.85	16.00	73	1,000 [472]
	RCFL-H*3621 (RGLT-07?AME?)	29,200 [8.6]	20,500 [6.0]	8,700 [2.5]	13.00	16.00	73	875 [413]
	RCFL-H*3621 (RGLT-07?BRQ?)	29,800 [8.7]	21,550 [6.3]	8,250 [2.4]	13.00	16.00	73	975 [460]
	RCFL-H*3621 (RGLT-10?BRM?)	29,800 [8.7]	21,550 [6.3]	8,250 [2.4]	13.00	16.00	73	975 [460]
	RCFL-H*3621 (-GPE-05?BMK?)	29,400 [8.6]	21,300 [6.2]	8,100 [2.4]	13.00	15.10	73	975 [460]
	RCFL-H*3621 (-GPE-07?AMK?)	29,400 [8.6]	21,250 [6.2]	8,150 [2.4]	13.00	15.50	73	1,000 [472]
	RCFL-H*3621 (-GPE-07?BRQ?)	29,600 [8.7]	21,450 [6.3]	8,150 [2.4]	13.00	16.00	73	1,025 [484]
	RCFL-H*3621 (-GPE-10?BRM?)	30,000 [8.8]	22,100 [6.5]	7,900 [2.3]	13.00	16.00	73	1,075 [507]
	RCFL-H*3621 (-GPR-05?BMK?)	29,400 [8.6]	21,250 [6.2]	8,150 [2.4]	13.10	15.10	73	1,000 [472]
	RCFL-H*3621 (-GPR-07?AMK?)	29,400 [8.6]	21,200 [6.2]	8,200 [2.4]	13.45	15.50	73	1,000 [472]

① Highest sales volume tested combination required by D.O.E. test procedures.

[ ] Designates Metric Conversions

Performance Data @ AHRI Standard Conditions—Cooling: UAPM- JAZ (continued)

Model Numbers		80°F [26.5°C] DB/67°F [19.5°C] WB Indoor Air 95°F [35°C] DB Outdoor Air					Sound Rating dB	Indoor CFM [L/s]
Outdoor Unit UAPM-	Indoor Coil and/or Air Handler	Total Capacity BTU/H [kW]	Net Sensible BTU/H [kW]	Net Latent BTU/H [kW]	EER	SEER		
Rev. 6/30/10	RCFL-H*3621 (-GPR-07?BRQ?)	29,800 [8.7]	21,550 [6.3]	8,250 [2.4]	13.90	16.00	73	1,000 [472]
	RCFL-H*3621 (RGPT-05?BMK?)	29,000 [8.5]	20,350 [6.0]	8,650 [2.5]	13.00	15.50	73	875 [413]
	RCFL-H*3621 (RGPT-07?AME?)	29,000 [8.5]	20,300 [5.9]	8,700 [2.5]	13.00	16.00	73	875 [413]
	RCFL-H*3621 (RGPT-10?BRM?)	29,800 [8.7]	21,550 [6.3]	8,250 [2.4]	13.00	16.00	73	975 [460]
	RCFL-H*3621 (-GRM-04?MAE?)	29,200 [8.6]	21,100 [6.2]	8,100 [2.4]	12.90	14.50	73	1,025 [484]
	RCFL-H*3621 (-GRM-06?MAE?)	28,800 [8.4]	20,000 [5.9]	8,800 [2.6]	13.50	15.50	73	825 [389]
	RCFL-H*3621 (-GRM-07?MAE?)	28,800 [8.4]	20,100 [5.9]	8,700 [2.5]	13.25	15.10	73	850 [401]
	RCFL-H*3621 (-GRM-07?YBG?)	29,200 [8.6]	21,100 [6.2]	8,100 [2.4]	12.85	14.50	73	975 [460]
	RCFL-H*3621 (-GRM-09?ZAJ?)	29,200 [8.6]	20,900 [6.1]	8,300 [2.4]	13.00	15.50	73	950 [448]
	RCFL-H*3621 (-GRM-10?ZAJ?)	29,400 [8.6]	21,300 [6.2]	8,100 [2.4]	13.00	15.10	73	1,025 [484]
	RCFL-H*3621 (-GTM-06?MAE?)	29,000 [8.5]	20,450 [6.0]	8,550 [2.5]	13.00	15.50	73	900 [425]
	RCFL-H*3621 (-GTM-07?RBG?)	29,400 [8.6]	21,000 [6.2]	8,400 [2.5]	13.00	15.50	73	950 [448]
	RCFL-H*3621 (-GTM-09?ZAJ?)	29,600 [8.7]	21,400 [6.3]	8,200 [2.4]	13.00	16.00	73	975 [460]
	ROCA-070E03 (RCFL-H*3621)	29,600 [8.7]	21,400 [6.3]	8,200 [2.4]	13.00	15.50	73	1,000 [472]
	ROCA-070E04 (RCFL-H*3621)	29,600 [8.7]	21,400 [6.3]	8,200 [2.4]	13.00	15.50	73	1,000 [472]
	ROLA-070E03 (RCFL-H*3621)	29,200 [8.6]	20,600 [6.0]	8,600 [2.5]	13.00	16.00	73	900 [425]
	ROLA-070E04 (RCFL-H*3621)	29,200 [8.6]	20,600 [6.0]	8,600 [2.5]	13.00	16.00	73	900 [425]
	ROLA-115E05 (RCFL-H*3621)	29,200 [8.6]	20,600 [6.0]	8,600 [2.5]	13.00	16.00	73	900 [425]
	RCFL-H*3621+RXMD-C04	29,000 [8.5]	20,950 [6.1]	8,050 [2.4]	12.55	14.50	73	1,000 [472]
	RCFL-H*3821	29,800 [8.7]	21,950 [6.4]	7,850 [2.3]	12.00	14.50	73	995 [470]
	RCFL-H*3821 (-GFD-06?MCK?)	29,800 [8.7]	21,900 [6.4]	7,900 [2.3]	13.00	15.00	73	1,000 [472]
	RCFL-H*3821 (-GFD-07?MCK?)	30,000 [8.8]	22,100 [6.5]	7,900 [2.3]	13.00	15.10	73	1,000 [472]
	RCFL-H*3821 (-GFD-09?ZCM?)	29,600 [8.7]	21,050 [6.2]	8,550 [2.5]	13.00	16.00	73	850 [401]
	RCFL-H*3821 (-GFD-10?ZCM?)	29,600 [8.7]	21,100 [6.2]	8,500 [2.5]	13.00	16.00	73	850 [401]
	RCFL-H*3821 (-GFE-06?MCK?)	30,000 [8.8]	22,050 [6.5]	7,950 [2.3]	13.00	15.10	73	1,000 [472]
	RCFL-H*3821 (-GFE-07?MCK?)	30,200 [8.8]	22,400 [6.6]	7,800 [2.3]	13.00	15.10	73	1,025 [484]
030JAZ	RCFL-H*3821 (-GFE-09?ZCM?)	30,200 [8.8]	22,200 [6.5]	8,000 [2.3]	13.00	16.00	73	975 [460]
	RCFL-H*3821 (-GFE-10?ZCM?)	30,200 [8.8]	22,200 [6.5]	8,000 [2.3]	13.00	16.00	73	1,000 [472]
	RCFL-H*3821 (-GGD-06?MCK?)	29,800 [8.7]	21,500 [6.3]	8,300 [2.4]	13.00	15.50	73	900 [425]
	RCFL-H*3821 (-GGD-07?MCK?)	29,800 [8.7]	21,600 [6.3]	8,200 [2.4]	13.00	15.50	73	925 [437]
	RCFL-H*3821 (-GGE-06?MCK?)	30,200 [8.8]	22,350 [6.5]	7,850 [2.3]	13.00	15.10	73	1,025 [484]
	RCFL-H*3821 (-GGE-07?MCK?)	30,200 [8.8]	22,350 [6.5]	7,850 [2.3]	13.00	15.50	73	1,025 [484]
	RCFL-H*3821 (-GGE-09?ZCM?)	30,200 [8.8]	22,200 [6.5]	8,000 [2.3]	13.00	16.00	73	1,000 [472]
	RCFL-H*3821 (-GGE-10?ZCM?)	30,200 [8.8]	22,200 [6.5]	8,000 [2.3]	13.00	16.00	73	1,000 [472]
	RCFL-H*3821 (-GJD-06?MCK?)	30,000 [8.8]	22,050 [6.5]	7,950 [2.3]	13.00	15.10	73	1,000 [472]
	RCFL-H*3821 (-GJD-07?MCK?)	30,200 [8.8]	22,400 [6.6]	7,800 [2.3]	13.00	15.10	73	1,025 [484]
	RCFL-H*3821 (-GJF-06?MCK?)	30,200 [8.8]	22,350 [6.5]	7,850 [2.3]	13.00	15.50	73	1,025 [484]
	RCFL-H*3821 (-GJF-07?MCK?)	30,200 [8.8]	22,350 [6.5]	7,850 [2.3]	13.00	15.50	73	1,025 [484]
	RCFL-H*3821 (-GJF-09?ZCM?)	30,400 [8.9]	22,550 [6.6]	7,850 [2.3]	13.00	16.00	73	1,025 [484]
	RCFL-H*3821 (-GJF-10?ZCM?)	30,200 [8.8]	22,200 [6.5]	8,000 [2.3]	13.00	16.00	73	1,000 [472]
	RCFL-H*3821 (-GLE-07?AMK?)	30,400 [8.9]	22,550 [6.6]	7,850 [2.3]	13.00	16.00	73	1,025 [484]
	RCFL-H*3821 (RGLE-07?BRQ?)	30,400 [8.9]	22,500 [6.6]	7,900 [2.3]	13.00	16.00	73	1,025 [484]
	RCFL-H*3821 (-GLE-10?BRM?)	30,600 [9.0]	22,800 [6.7]	7,800 [2.3]	13.00	16.00	73	1,050 [495]
	RCFL-H*3821 (-GLR-07?AMK?)	30,000 [8.8]	21,750 [6.4]	8,250 [2.4]	13.00	16.00	73	925 [437]
	RCFL-H*3821 (-GLR-07?BRQ?)	30,400 [8.9]	22,400 [6.6]	8,000 [2.3]	13.00	16.00	73	1,000 [472]
	RCFL-H*3821 (-GLR-10?BRM?)	30,000 [8.8]	21,700 [6.4]	8,300 [2.4]	13.00	16.00	73	925 [437]
	RCFL-H*3821 (RGLT-07?AME?)	30,000 [8.8]	21,750 [6.4]	8,250 [2.4]	13.00	16.00	73	925 [437]
	RCFL-H*3821 (RGLT-07?BRQ?)	30,600 [9.0]	22,700 [6.7]	7,900 [2.3]	13.00	16.00	73	1,025 [484]
	RCFL-H*3821 (RGLT-10?BRM?)	30,600 [9.0]	22,700 [6.7]	7,900 [2.3]	13.00	16.00	73	1,025 [484]
	RCFL-H*3821 (-GPE-05?BMK?)	30,200 [8.8]	22,250 [6.5]	7,950 [2.3]	13.00	15.50	73	975 [460]
	RCFL-H*3821 (-GPE-07?AMK?)	29,800 [8.7]	21,450 [6.3]	8,350 [2.4]	13.00	16.00	73	900 [425]
	RCFL-H*3821 (-GPE-07?BRQ?)	30,400 [8.9]	22,500 [6.6]	7,900 [2.3]	13.00	16.00	73	1,025 [484]
	RCFL-H*3821 (-GPE-10?BRM?)	30,000 [8.8]	21,600 [6.3]	8,400 [2.5]	13.00	16.00	73	900 [425]

① Highest sales volume tested combination required by D.O.E. test procedures.

[ ] Designates Metric Conversions

Performance Data @ AHRI Standard Conditions—Cooling: UAPM- JAZ (continued)

Model Numbers		80°F [26.5°C] DB/67°F [19.5°C] WB Indoor Air 95°F [35°C] DB Outdoor Air					Sound Rating dB	Indoor CFM [L/s]
Outdoor Unit UAPM-	Indoor Coil and/or Air Handler	Total Capacity BTU/H [kW]	Net Sensible BTU/H [kW]	Net Latent BTU/H [kW]	EER	SEER		
Rev. 6/30/10	RCFL-H*3821 (-GPR-05?BMK?)	30,000 [8.8]	22,100 [6.5]	7,900 [2.3]	13.00	15.10	73	1,000 [472]
	RCFL-H*3821 (-GPR-07?AMK?)	30,200 [8.8]	22,250 [6.5]	7,950 [2.3]	13.00	15.10	73	1,000 [472]
	RCFL-H*3821 (-GPR-07?BRQ?)	30,400 [8.9]	22,400 [6.6]	8,000 [2.3]	13.00	16.00	73	1,000 [472]
	RCFL-H*3821 (-GPR-10?BRM?)	30,000 [8.8]	21,750 [6.4]	8,250 [2.4]	13.00	16.00	73	925 [437]
	RCFL-H*3821 (RGPT-05?BMK?)	29,800 [8.7]	21,450 [6.3]	8,350 [2.4]	13.00	15.50	73	900 [425]
	RCFL-H*3821 (RGPT-07?AME?)	30,000 [8.8]	21,750 [6.4]	8,250 [2.4]	13.00	16.00	73	925 [437]
	RCFL-H*3821 (RGPT-07?BRQ?)	30,600 [9.0]	22,700 [6.7]	7,900 [2.3]	13.00	16.00	73	1,025 [484]
	RCFL-H*3821 (RGPT-10?BRM?)	30,600 [9.0]	22,700 [6.7]	7,900 [2.3]	13.00	16.00	73	1,025 [484]
	RCFL-H*3821 (-GRM-04?MAE?)	29,800 [8.7]	21,600 [6.3]	8,200 [2.4]	13.00	15.10	73	925 [437]
	RCFL-H*3821 (-GRM-06?MAE?)	30,000 [8.8]	22,100 [6.5]	7,900 [2.3]	13.00	15.10	73	1,000 [472]
	RCFL-H*3821 (-GRM-07?MAE?)	29,600 [8.7]	21,550 [6.3]	8,050 [2.4]	13.00	15.00	73	950 [448]
	RCFL-H*3821 (-GRM-07?YBG?)	30,000 [8.8]	22,100 [6.5]	7,900 [2.3]	13.00	15.00	73	975 [460]
	RCFL-H*3821 (-GRM-09?ZAJ?)	30,000 [8.8]	21,850 [6.4]	8,150 [2.4]	13.00	15.50	73	950 [448]
	RCFL-H*3821 (-GRM-10?ZAJ?)	30,200 [8.8]	22,350 [6.5]	7,850 [2.3]	13.00	15.50	73	1,025 [484]
	RCFL-H*3821 (-GTM-06?MAE?)	29,800 [8.7]	21,450 [6.3]	8,350 [2.4]	13.00	16.00	73	900 [425]
	RCFL-H*3821 (-GTM-07?RBG?)	30,000 [8.8]	21,850 [6.4]	8,150 [2.4]	13.00	16.00	73	950 [448]
	RCFL-H*3821 (-GTM-09?ZAJ?)	30,400 [8.9]	22,400 [6.6]	8,000 [2.3]	13.00	16.00	73	975 [460]
	ROCA-070E03 (RCFL-H*3821)	30,200 [8.8]	22,200 [6.5]	8,000 [2.3]	13.00	15.50	73	1,000 [472]
	ROCA-070E04 (RCFL-H*3821)	30,200 [8.8]	22,200 [6.5]	8,000 [2.3]	13.00	15.50	73	1,000 [472]
	ROLA-070E03 (RCFL-H*3821)	30,200 [8.8]	22,200 [6.5]	8,000 [2.3]	13.00	16.00	73	975 [460]
	ROLA-070E04 (RCFL-H*3821)	30,400 [8.9]	22,550 [6.6]	7,850 [2.3]	13.00	16.00	73	1,025 [484]
	ROLA-115E05 (RCFL-H*3821)	30,600 [9.0]	22,800 [6.7]	7,800 [2.3]	13.00	16.00	73	1,050 [495]
	RCFL-H*3824	29,800 [8.7]	21,950 [6.4]	7,850 [2.3]	12.00	14.50	73	995 [470]
	RCFL-H*3824 (-GFD-09?ZCM?)	29,600 [8.7]	21,050 [6.2]	8,550 [2.5]	13.00	16.00	73	850 [401]
	RCFL-H*3824 (-GFD-10?ZCM?)	29,600 [8.7]	21,100 [6.2]	8,500 [2.5]	13.00	16.00	73	850 [401]
	RCFL-H*3824 (-GFD-12?RCM?)	29,800 [8.7]	21,450 [6.3]	8,350 [2.4]	13.00	16.00	73	900 [425]
030JAZ	RCFL-H*3824 (-GFE-09?ZCM?)	30,400 [8.9]	22,550 [6.6]	7,850 [2.3]	13.00	15.50	73	1,025 [484]
	RCFL-H*3824 (-GFE-10?ZCM?)	29,800 [8.7]	21,450 [6.3]	8,350 [2.4]	13.00	16.00	73	900 [425]
	RCFL-H*3824 (-GFE-12?RCM?)	30,400 [8.9]	22,400 [6.6]	8,000 [2.3]	13.00	16.00	73	975 [460]
	RCFL-H*3824 (-GGD-12?RCM?)	29,800 [8.7]	21,450 [6.3]	8,350 [2.4]	13.00	16.00	73	900 [425]
	RCFL-H*3824 (-GGE-09?ZCM?)	30,200 [8.8]	22,200 [6.5]	8,000 [2.3]	13.00	16.00	73	1,000 [472]
	RCFL-H*3824 (-GGE-10?ZCM?)	30,200 [8.8]	22,200 [6.5]	8,000 [2.3]	13.00	16.00	73	1,000 [472]
	RCFL-H*3824 (-GGE-12?RCM?)	30,600 [9.0]	22,800 [6.7]	7,800 [2.3]	13.00	16.00	73	1,050 [495]
	RCFL-H*3824 (-GJF-09?ZCM?)	30,400 [8.9]	22,550 [6.6]	7,850 [2.3]	13.00	16.00	73	1,025 [484]
	RCFL-H*3824 (-GJF-10?ZCM?)	30,400 [8.9]	22,650 [6.6]	7,750 [2.3]	13.00	15.50	73	1,050 [495]
	RCFL-H*3824 (-GJF-12?RCM?)	30,600 [9.0]	22,800 [6.7]	7,800 [2.3]	13.00	16.00	73	1,050 [495]
	RCFL-H*3824 (RGLE-07?BRQ?)	30,000 [8.8]	21,700 [6.4]	8,300 [2.4]	13.00	16.00	73	925 [437]
	RCFL-H*3824 (-GLE-10?BRM?)	29,800 [8.7]	21,350 [6.3]	8,450 [2.5]	13.00	16.00	73	875 [413]
	RCFL-H*3824 (-GLE-12?ARM?)	30,200 [8.8]	21,900 [6.4]	8,300 [2.4]	13.00	16.00	73	925 [437]
	RCFL-H*3824 (-GLR-07?BRQ?)	30,000 [8.8]	21,650 [6.3]	8,350 [2.4]	13.00	16.00	73	900 [425]
	RCFL-H*3824 (-GLR-10?BRM?)	30,600 [9.0]	22,800 [6.7]	7,800 [2.3]	13.00	16.00	73	1,050 [495]
	RCFL-H*3824 (-GLR-12?ARM?)	30,400 [8.9]	22,350 [6.5]	8,050 [2.4]	13.00	16.00	73	1,000 [472]
	RCFL-H*3824 (RGLT-07?BRQ?)	30,600 [9.0]	22,700 [6.7]	7,900 [2.3]	13.00	16.00	73	1,025 [484]
	RCFL-H*3824 (RGLT-10?BRM?)	30,600 [9.0]	22,700 [6.7]	7,900 [2.3]	13.00	16.00	73	1,025 [484]
	RCFL-H*3824 (RGLT-12?ARM?)	30,400 [8.9]	22,350 [6.5]	8,050 [2.4]	13.00	16.00	73	975 [460]
	RCFL-H*3824 (-GPE-07?BRQ?)	30,000 [8.8]	21,650 [6.3]	8,350 [2.4]	13.00	16.00	73	900 [425]
	RCFL-H*3824 (-GPE-10?BRM?)	30,800 [9.0]	23,100 [6.8]	7,700 [2.3]	13.00	16.00	73	1,075 [507]
	RCFL-H*3824 (-GPE-12?ARM?)	30,800 [9.0]	23,100 [6.8]	7,700 [2.3]	13.00	16.00	73	1,075 [507]
	RCFL-H*3824 (-GPR-07?BRQ?)	29,800 [8.7]	21,350 [6.3]	8,450 [2.5]	13.00	16.00	73	875 [413]
	RCFL-H*3824 (-GPR-10?BRM?)	30,000 [8.8]	21,750 [6.4]	8,250 [2.4]	13.00	16.00	73	925 [437]
	RCFL-H*3824 (-GPR-12?ARM?)	30,400 [8.9]	22,400 [6.6]	8,000 [2.3]	13.00	16.00	73	1,000 [472]
	RCFL-H*3824 (RGPT-07?BRQ?)	30,600 [9.0]	22,700 [6.7]	7,900 [2.3]	13.00	16.00	73	1,025 [484]
	RCFL-H*3824 (RGPT-10?BRM?)	30,600 [9.0]	22,700 [6.7]	7,900 [2.3]	13.00	16.00	73	1,025 [484]

① Highest sales volume tested combination required by D.O.E. test procedures.

[ ] Designates Metric Conversions

Performance Data @ AHRI Standard Conditions—Cooling: UAPM- JAZ (continued)

Model Numbers		80°F [26.5°C] DB/67°F [19.5°C] WB Indoor Air 95°F [35°C] DB Outdoor Air					Sound Rating dB	Indoor CFM [L/s]
Outdoor Unit UAPM-	Indoor Coil and/or Air Handler	Total Capacity BTU/H [kW]	Net Sensible BTU/H [kW]	Net Latent BTU/H [kW]	EER	SEER		
Rev. 6/30/10	RCFL-H*3824 (RGPT-12?ARM?)	30,400 [8.9]	22,350 [6.5]	8,050 [2.4]	13.00	16.00	73	975 [460]
	RCFL-H*3824 (-GRM-07?YBG?)	29,400 [8.6]	20,950 [6.1]	8,450 [2.5]	13.00	15.10	73	850 [401]
	RCFL-H*3824 (-GRM-09?ZAJ?)	30,400 [8.9]	22,750 [6.7]	7,650 [2.2]	13.00	15.50	73	1,075 [507]
	RCFL-H*3824 (-GRM-10?ZAJ?)	30,200 [8.8]	22,350 [6.5]	7,850 [2.3]	13.00	15.50	73	1,025 [484]
	RCFL-H*3824 (-GRM-12?RAJ?)	30,000 [8.8]	21,750 [6.4]	8,250 [2.4]	13.00	16.00	73	925 [437]
	RCFL-H*3824 (-GTM-07?RBG?)	30,000 [8.8]	21,850 [6.4]	8,150 [2.4]	13.00	16.00	73	950 [448]
	RCFL-H*3824 (-GTM-09?ZAJ?)	30,800 [9.0]	23,250 [6.8]	7,550 [2.2]	13.00	16.00	73	1,100 [519]
	ROCA-070E03 (RCFL-H*3824)	30,200 [8.8]	22,200 [6.5]	8,000 [2.3]	13.00	15.50	73	1,000 [472]
	ROCA-070E04 (RCFL-H*3824)	30,200 [8.8]	22,200 [6.5]	8,000 [2.3]	13.00	15.50	73	1,000 [472]
	ROLA-070E03 (RCFL-H*3824)	30,200 [8.8]	22,200 [6.5]	8,000 [2.3]	13.00	16.00	73	975 [460]
	ROLA-070E04 (RCFL-H*3824)	30,200 [8.8]	22,200 [6.5]	8,000 [2.3]	13.00	16.00	73	975 [460]
	ROLA-115E05 (RCFL-H*3824)	29,800 [8.7]	21,450 [6.3]	8,350 [2.4]	13.00	16.00	73	900 [425]
	-BHP-21 (RCHL-36A1)	28,000 [8.2]	19,450 [5.7]	8,550 [2.5]	13.20	15.00	73	1,000 [472]
	RCQD-3621 (-GFE-06?MCK?)	29,800 [8.7]	22,200 [6.5]	7,600 [2.2]	13.00	15.00	73	1,000 [472]
	RCQD-3621 (-GFE-07?MCK?)	29,800 [8.7]	22,200 [6.5]	7,600 [2.2]	13.00	15.00	73	1,025 [484]
	RCQD-3621 (-GFE-09?ZCM?)	30,000 [8.8]	22,350 [6.5]	7,650 [2.2]	13.00	15.50	73	1,025 [484]
	RCQD-3621 (-GFE-10?ZCM?)	30,200 [8.8]	22,550 [6.6]	7,650 [2.2]	13.00	15.50	73	1,000 [472]
	RCQD-3621 (-GJF-06?MCK?)	30,000 [8.8]	22,350 [6.5]	7,650 [2.2]	13.00	15.00	73	1,025 [484]
	RCQD-3621 (-GJF-07?MCK?)	30,000 [8.8]	22,400 [6.6]	7,600 [2.2]	13.00	15.00	73	1,025 [484]
	RCQD-3621 (-GJF-09?ZCM?)	30,200 [8.8]	22,550 [6.6]	7,650 [2.2]	13.00	15.50	73	1,000 [472]
	RCQD-3621 (-GJF-10?ZCM?)	30,200 [8.8]	22,550 [6.6]	7,650 [2.2]	13.00	15.50	73	1,000 [472]
	RCQD-3621 (-GPE-05?BMK?)	30,000 [8.8]	22,350 [6.5]	7,650 [2.2]	13.00	15.00	73	975 [460]
	RCQD-3621 (-GPE-07?AMK?)	30,000 [8.8]	22,350 [6.5]	7,650 [2.2]	13.00	15.50	73	1,000 [472]
	RCQD-3621 (-GPE-07?BRQ?)	30,200 [8.8]	22,500 [6.6]	7,700 [2.3]	13.00	16.00	73	1,025 [484]
	RCQD-3621 (-GPE-10?BRM?)	29,800 [8.7]	21,750 [6.4]	8,050 [2.4]	13.00	16.00	73	900 [425]
	RCQD-3621 (RGPT-05?BMK?)	29,600 [8.7]	21,550 [6.3]	8,050 [2.4]	13.00	15.50	73	900 [425]
030JAZ	RCQD-3621 (RGPT-07?AME?)	29,800 [8.7]	21,800 [6.4]	8,000 [2.3]	13.00	15.50	73	925 [437]
	RCQD-3621 (RGPT-07?BRQ?)	30,400 [8.9]	22,850 [6.7]	7,550 [2.2]	13.00	16.00	73	1,050 [495]
	RCQD-3621 (RGPT-10?BRM?)	30,400 [8.9]	22,850 [6.7]	7,550 [2.2]	13.00	16.00	73	1,050 [495]
	RCQD-3621 (-GRM-04?MAE?)	30,600 [9.0]	23,650 [6.9]	6,950 [2.0]	13.65	14.50	73	1,025 [484]
	RCQD-3621 (-GRM-06?MAE?)	30,600 [9.0]	23,650 [6.9]	6,950 [2.0]	13.85	15.00	73	1,000 [472]
	RCQD-3621 (-GRM-07?MAE?)	30,400 [8.9]	23,500 [6.9]	6,900 [2.0]	13.30	14.00	73	1,025 [484]
	RCQD-3621 (-GRM-07?YBG?)	30,600 [9.0]	23,650 [6.9]	6,950 [2.0]	13.70	14.50	73	975 [460]
	RCQD-3621 (-GRM-09?ZAJ?)	29,800 [8.7]	21,950 [6.4]	7,850 [2.3]	13.00	15.50	73	950 [448]
	RCQD-3621 (-GRM-10?ZAJ?)	30,000 [8.8]	22,400 [6.6]	7,600 [2.2]	13.00	15.00	73	1,025 [484]
	ROCA-070E03 (RCQD-3621)	30,000 [8.8]	22,300 [6.5]	7,700 [2.3]	13.00	15.50	73	1,000 [472]
	ROCA-070E04 (RCQD-3621)	30,000 [8.8]	22,300 [6.5]	7,700 [2.3]	13.00	15.50	73	1,000 [472]
	ROLA-070E03 (RCQD-3621)	30,200 [8.8]	22,450 [6.6]	7,750 [2.3]	13.00	15.50	73	975 [460]
	ROLA-070E04 (RCQD-3621)	30,200 [8.8]	22,450 [6.6]	7,750 [2.3]	13.00	15.50	73	975 [460]
	ROLA-115E05 (RCQD-3621)	30,400 [8.9]	22,900 [6.7]	7,500 [2.2]	13.00	15.50	73	1,050 [495]
	RCQD-3621A*	29,600 [8.7]	22,000 [6.4]	7,600 [2.2]	12.75	14.00	73	1,000 [472]
	RCQD-3621A* (-GFD-06?MCK?)	29,800 [8.7]	22,200 [6.5]	7,600 [2.2]	13.20	14.50	73	1,000 [472]
	RCQD-3621A* (-GFD-07?MCK?)	29,800 [8.7]	22,150 [6.5]	7,650 [2.2]	13.50	15.00	73	1,000 [472]
	RCQD-3621A* (-GJD-06?MCK?)	30,000 [8.8]	22,350 [6.5]	7,650 [2.2]	13.60	15.00	73	1,000 [472]
	RCQD-3621A* (-GJD-07?MCK?)	30,000 [8.8]	22,450 [6.6]	7,550 [2.2]	13.60	15.00	73	1,025 [484]
	RCQD-3621A* (-GPR-05?BMK?)	29,800 [8.7]	22,150 [6.5]	7,650 [2.2]	13.45	15.00	73	1,000 [472]
	RCQD-3621A* (-GPR-07?AMK?)	30,000 [8.8]	22,300 [6.5]	7,700 [2.3]	13.80	15.50	73	1,000 [472]
	RCQD-3621A* (-GPR-07?BRQ?)	30,200 [8.8]	22,450 [6.6]	7,750 [2.3]	14.30	16.00	73	1,000 [472]
	RCQD-3624 (-GPE-07?BRQ?)	30,400 [8.9]	22,850 [6.7]	7,550 [2.2]	13.00	16.00	73	1,050 [495]
	RCQD-3624 (RGPT-07?BRQ?)	30,600 [9.0]	23,050 [6.8]	7,550 [2.2]	13.00	16.00	73	1,050 [495]
	RCQD-3624 (RGPT-10?BRM?)	30,600 [9.0]	23,150 [6.8]	7,450 [2.2]	13.00	16.00	73	1,075 [507]
	RCQD-3624 (RGPT-12?ARM?)	30,400 [8.9]	22,650 [6.6]	7,750 [2.3]	13.00	16.00	73	975 [460]
	RCQD-3624 (-GRM-07?YBG?)	30,600 [9.0]	23,700 [6.9]	6,900 [2.0]	13.80	15.00	73	975 [460]

① Highest sales volume tested combination required by D.O.E. test procedures.

[ ] Designates Metric Conversions

Performance Data @ AHRI Standard Conditions—Cooling: UAPM- JAZ (continued)

Model Numbers		80°F [26.5°C] DB/67°F [19.5°C] WB Indoor Air 95°F [35°C] DB Outdoor Air					Sound Rating dB	Indoor CFM [L/s]
Outdoor Unit UAPM-	Indoor Coil and/or Air Handler	Total Capacity BTU/H [kW]	Net Sensible BTU/H [kW]	Net Latent BTU/H [kW]	EER	SEER		
Rev. 6/30/10	ROCA-070E03 (RCQD-3624)	30,200 [8.8]	22,500 [6.6]	7,700 [2.3]	13.00	15.50	73	1,000 [472]
	ROCA-070E04 (RCQD-3624)	30,200 [8.8]	22,500 [6.6]	7,700 [2.3]	13.00	15.50	73	1,000 [472]
	ROLA-070E03 (RCQD-3624)	30,200 [8.8]	22,450 [6.6]	7,750 [2.3]	13.00	16.00	73	975 [460]
	ROLA-070E04 (RCQD-3624)	30,200 [8.8]	22,450 [6.6]	7,750 [2.3]	13.00	16.00	73	975 [460]
	ROLA-115E05 (RCQD-3624)	29,800 [8.7]	21,700 [6.4]	8,100 [2.4]	13.00	16.00	73	900 [425]
030JAZ	RCQD-3624A*	29,600 [8.7]	22,000 [6.4]	7,600 [2.2]	12.75	14.00	73	1,000 [472]
	RCQD-3624A* (RGPR-07?BRQ?)	30,200 [8.8]	22,450 [6.6]	7,750 [2.3]	14.35	16.00	73	1,000 [472]
	-HKL-HM3617 (RCSL-H*3617)	29,600 [8.7]	21,350 [6.3]	8,250 [2.4]	13.75	16.00	73	1,025 [484]
	-HLL-HM3617 (RCSL-H*3617)	29,800 [8.7]	21,550 [6.3]	8,250 [2.4]	13.95	16.00	73	1,000 [472]
	-HSL-HM3017 (RCSL-H*3617)	29,000 [8.5]	20,700 [6.1]	8,300 [2.4]	12.85	14.50	73	950 [448]
	-HKL-HM3821 (RCSL-H*3821)	30,400 [8.9]	22,350 [6.5]	8,050 [2.4]	13.00	16.00	73	1,000 [472]
	-HLL-HM3821 (RCSL-H*3821)	30,400 [8.9]	22,400 [6.6]	8,000 [2.3]	13.00	16.00	73	975 [460]
	RCFL-H*3617 ①	35,200 [10.3]	23,650 [6.9]	11,550 [3.4]	12.00	14.50	76	1,050 [495]
	RCFL-H*3617+RXMD-C04 ①	35,400 [10.4]	23,800 [7.0]	11,600 [3.4]	12.20	14.50	76	1,050 [495]
	RCFL-A*3617	35,200 [10.3]	23,650 [6.9]	11,550 [3.4]	12.00	14.50	76	1,050 [495]
	RCFL-A*3617 (-GFD-06?MCK?)	35,000 [10.3]	23,200 [6.8]	11,800 [3.5]	12.00	14.50	76	1,000 [472]
	RCFL-A*3617 (-GFD-07?MCK?)	35,400 [10.4]	23,500 [6.9]	11,900 [3.5]	12.60	15.00	76	1,000 [472]
	RCFL-A*3617 (-GFE-06?MCK?)	35,200 [10.3]	23,350 [6.8]	11,850 [3.5]	12.00	14.50	76	1,000 [472]
	RCFL-A*3617 (-GFE-07?MCK?)	35,400 [10.4]	23,750 [7.0]	11,650 [3.4]	12.00	14.50	76	1,025 [484]
	RCFL-A*3617 (-GGD-06?MCK?)	35,400 [10.4]	23,500 [6.9]	11,900 [3.5]	12.65	15.00	76	1,000 [472]
	RCFL-A*3617 (-GGD-07?MCK?)	35,600 [10.4]	23,900 [7.0]	11,700 [3.4]	12.65	15.00	76	1,025 [484]
	RCFL-A*3617 (-GGE-06?MCK?)	35,600 [10.4]	23,900 [7.0]	11,700 [3.4]	12.50	15.10	76	1,025 [484]
	RCFL-A*3617 (-GGE-07?MCK?)	35,600 [10.4]	23,900 [7.0]	11,700 [3.4]	12.50	15.10	76	1,025 [484]
	RCFL-A*3617 (-GLE-07?AMK?)	35,800 [10.5]	24,100 [7.1]	11,700 [3.4]	12.50	15.10	76	1,025 [484]
	RCFL-A*3617 (-GLR-07?AMK?)	35,800 [10.5]	24,050 [7.0]	11,750 [3.4]	12.95	15.10	76	1,025 [484]
	RCFL-A*3617 (RGLT-07?AME?)	35,600 [10.4]	23,900 [7.0]	11,700 [3.4]	12.50	15.10	76	1,050 [495]
	RCFL-A*3617 (-GPR-05?BMK?)	35,400 [10.4]	23,500 [6.9]	11,900 [3.5]	12.20	14.50	76	1,000 [472]
	RCFL-A*3617 (-GPR-07?AMK?)	35,400 [10.4]	23,450 [6.9]	11,950 [3.5]	12.80	15.10	76	1,000 [472]
	RCFL-A*3617 (RGPT-05?BMK?)	35,400 [10.4]	23,750 [7.0]	11,650 [3.4]	12.00	14.50	76	1,050 [495]
	RCFL-A*3617 (RGPT-07?AME?)	35,600 [10.4]	23,900 [7.0]	11,700 [3.4]	12.50	15.00	76	1,050 [495]
	RCFL-A*3617 (-GRM-04?MAE?)	35,600 [10.4]	23,950 [7.0]	11,650 [3.4]	12.50	14.50	76	1,025 [484]
	RCFL-A*3617 (-GRM-06?MAE?)	35,400 [10.4]	23,500 [6.9]	11,900 [3.5]	12.55	14.50	76	1,000 [472]
036JAZ	RCFL-A*3617 (-GRM-07?MAE?)	35,400 [10.4]	23,800 [7.0]	11,600 [3.4]	12.25	14.50	76	1,025 [484]
	ROCA-070E03 (RCFL-A*3617)	36,200 [10.6]	25,250 [7.4]	10,950 [3.2]	12.00	14.50	76	1,200 [566]
	ROCA-070E04 (RCFL-A*3617)	36,200 [10.6]	25,250 [7.4]	10,950 [3.2]	12.00	14.50	76	1,200 [566]
	ROLA-070E03 (RCFL-A*3617)	36,200 [10.6]	25,050 [7.3]	11,150 [3.3]	12.50	15.00	76	1,175 [554]
	ROLA-070E04 (RCFL-A*3617)	35,800 [10.5]	24,100 [7.1]	11,700 [3.4]	12.50	15.10	76	1,025 [484]
	RCFL-A*3617+RXMD-C04	35,400 [10.4]	23,800 [7.0]	11,600 [3.4]	12.20	14.50	76	1,050 [495]
	RCFL-A*3621	35,200 [10.3]	23,650 [6.9]	11,550 [3.4]	12.00	14.50	76	1,050 [495]
	RCFL-A*3621 (-GFD-06?MCK?)	35,200 [10.3]	23,400 [6.9]	11,800 [3.5]	12.00	14.50	76	1,000 [472]
	RCFL-A*3621 (-GFD-07?MCK?)	35,400 [10.4]	23,500 [6.9]	11,900 [3.5]	12.65	15.00	76	1,000 [472]
	RCFL-A*3621 (-GFD-09?ZCM?)	36,200 [10.6]	24,900 [7.3]	11,300 [3.3]	12.80	15.10	76	1,150 [543]
	RCFL-A*3621 (-GFD-10?ZCM?)	36,400 [10.7]	25,250 [7.4]	11,150 [3.3]	12.60	15.00	76	1,175 [554]
	RCFL-A*3621 (-GFE-06?MCK?)	35,200 [10.3]	23,350 [6.8]	11,850 [3.5]	12.00	14.50	76	1,000 [472]
	RCFL-A*3621 (-GFE-07?MCK?)	35,600 [10.4]	23,950 [7.0]	11,650 [3.4]	12.00	14.50	76	1,025 [484]
	RCFL-A*3621 (-GFE-09?ZCM?)	35,800 [10.5]	24,100 [7.1]	11,700 [3.4]	12.50	15.10	76	1,025 [484]
	RCFL-A*3621 (-GFE-10?ZCM?)	35,600 [10.4]	23,900 [7.0]	11,700 [3.4]	12.50	15.10	76	1,025 [484]
	RCFL-A*3621 (-GGD-06?MCK?)	35,400 [10.4]	23,500 [6.9]	11,900 [3.5]	12.70	15.00	76	1,000 [472]
	RCFL-A*3621 (-GGD-07?MCK?)	35,800 [10.5]	24,100 [7.1]	11,700 [3.4]	12.70	15.10	76	1,025 [484]
	RCFL-A*3621 (-GGD-09?ZCM?)	36,400 [10.7]	25,250 [7.4]	11,150 [3.3]	12.80	15.10	76	1,175 [554]
	RCFL-A*3621 (-GGD-10?ZCM?)	36,400 [10.7]	25,200 [7.4]	11,200 [3.3]	12.85	15.10	76	1,175 [554]
	RCFL-A*3621 (-GGE-06?MCK?)	35,600 [10.4]	23,900 [7.0]	11,700 [3.4]	12.50	15.10	76	1,025 [484]
	RCFL-A*3621 (-GGE-07?MCK?)	35,600 [10.4]	23,900 [7.0]	11,700 [3.4]	12.50	15.10	76	1,025 [484]

① Highest sales volume tested combination required by D.O.E. test procedures.

[ ] Designates Metric Conversions

Performance Data @ AHRI Standard Conditions—Cooling: UAPM- JAZ (continued)

Model Numbers		80°F [26.5°C] DB/67°F [19.5°C] WB Indoor Air 95°F [35°C] DB Outdoor Air					Sound Rating dB	Indoor CFM [L/s]
Outdoor Unit UAPM-	Indoor Coil and/or Air Handler	Total Capacity BTU/H [kW]	Net Sensible BTU/H [kW]	Net Latent BTU/H [kW]	EER	SEER		
Rev. 6/30/10	RCFL-A*3621 (-GGE-09?ZCM?)	35,800 [10.5]	24,050 [7.0]	11,750 [3.4]	12.50	15.10	76	1,025 [484]
	RCFL-A*3621 (-GGE-10?ZCM?)	35,600 [10.4]	23,900 [7.0]	11,700 [3.4]	12.50	15.10	76	1,050 [495]
	RCFL-A*3621 (-GLE-07?AMK?)	35,800 [10.5]	24,050 [7.0]	11,750 [3.4]	12.50	15.10	76	1,025 [484]
	RCFL-A*3621 (-GLE-10?BRM?)	35,800 [10.5]	24,000 [7.0]	11,800 [3.5]	13.00	15.50	76	1,050 [495]
	RCFL-A*3621 (-GLR-07?AMK?)	35,800 [10.5]	24,050 [7.0]	11,750 [3.4]	13.05	15.50	76	1,025 [484]
	RCFL-A*3621 (-GLR-07?BRQ?)	35,800 [10.5]	23,800 [7.0]	12,000 [3.5]	13.20	15.50	76	1,000 [472]
	RCFL-A*3621 (-GLR-10?BRM?)	35,800 [10.5]	24,050 [7.0]	11,750 [3.4]	13.00	15.50	76	1,050 [495]
	RCFL-A*3621 (RGLT-07?AME?)	35,600 [10.4]	23,900 [7.0]	11,700 [3.4]	12.50	15.10	76	1,075 [507]
	RCFL-A*3621 (RGLT-07?BRQ?)	36,400 [10.7]	25,350 [7.4]	11,050 [3.2]	12.50	15.10	76	1,200 [566]
	RCFL-A*3621 (RGLT-10?BRM?)	36,400 [10.7]	25,200 [7.4]	11,200 [3.3]	12.50	15.10	76	1,175 [554]
	RCFL-A*3621 (-GPE-07?BRQ?)	35,800 [10.5]	24,050 [7.0]	11,750 [3.4]	13.00	15.50	76	1,025 [484]
	RCFL-A*3621 (-GPE-10?BRM?)	35,800 [10.5]	24,050 [7.0]	11,750 [3.4]	13.00	15.50	76	1,075 [507]
	RCFL-A*3621 (-GPL-07?BRQ?)	35,800 [10.5]	23,800 [7.0]	12,000 [3.5]	13.20	15.50	76	1,000 [472]
	RCFL-A*3621 (-GPR-05?BMK?)	35,400 [10.4]	23,500 [6.9]	11,900 [3.5]	12.20	14.50	76	1,000 [472]
	RCFL-A*3621 (-GPR-07?AMK?)	35,600 [10.4]	23,650 [6.9]	11,950 [3.5]	12.85	15.10	76	1,000 [472]
	RCFL-A*3621 (-GPR-07?BRQ?)	35,800 [10.5]	23,800 [7.0]	12,000 [3.5]	13.20	15.50	76	1,000 [472]
	RCFL-A*3621 (-GPR-10?BRM?)	35,800 [10.5]	24,050 [7.0]	11,750 [3.4]	12.50	15.10	76	1,075 [507]
	RCFL-A*3621 (RGPT-05?BMK?)	35,600 [10.4]	23,950 [7.0]	11,650 [3.4]	12.00	14.50	76	1,075 [507]
	RCFL-A*3621 (RGPT-07?AME?)	35,600 [10.4]	23,900 [7.0]	11,700 [3.4]	12.50	15.10	76	1,050 [495]
	RCFL-A*3621 (RGPT-07?BRQ?)	36,000 [10.5]	24,200 [7.1]	11,800 [3.5]	13.00	15.50	76	1,050 [495]
	RCFL-A*3621 (RGPT-10?BRM?)	36,400 [10.7]	25,200 [7.4]	11,200 [3.3]	12.50	15.10	76	1,175 [554]
	RCFL-A*3621 (-GRM-04?MAE?)	35,600 [10.4]	23,950 [7.0]	11,650 [3.4]	12.55	14.50	76	1,025 [484]
	RCFL-A*3621 (-GRM-06?MAE?)	35,400 [10.4]	23,500 [6.9]	11,900 [3.5]	12.60	14.50	76	1,000 [472]
	RCFL-A*3621 (-GRM-07?MAE?)	35,400 [10.4]	23,800 [7.0]	11,600 [3.4]	12.30	14.50	76	1,025 [484]
	RCFL-A*3621 (-GRM-09?ZAJ?)	35,600 [10.4]	23,950 [7.0]	11,650 [3.4]	12.50	15.00	76	1,075 [507]
	RCFL-A*3621 (-GRM-10?ZAJ?)	35,600 [10.4]	23,900 [7.0]	11,700 [3.4]	12.50	15.10	76	1,025 [484]
036JAZ	ROCA-070E03 (RCFL-A*3621)	36,200 [10.6]	25,250 [7.4]	10,950 [3.2]	12.00	14.50	76	1,200 [566]
	ROCA-070E04 (RCFL-A*3621)	36,200 [10.6]	25,250 [7.4]	10,950 [3.2]	12.00	14.50	76	1,200 [566]
	ROLA-070E03 (RCFL-A*3621)	36,200 [10.6]	25,050 [7.3]	11,150 [3.3]	12.50	15.10	76	1,175 [554]
	ROLA-070E04 (RCFL-A*3621)	36,200 [10.6]	25,050 [7.3]	11,150 [3.3]	12.50	15.10	76	1,175 [554]
	ROLA-115E05 (RCFL-A*3621)	36,400 [10.7]	25,350 [7.4]	11,050 [3.2]	12.50	15.10	76	1,200 [566]
	RCFL-A*3821 (RGLT-07?AME?)	37,200 [10.9]	25,700 [7.5]	11,500 [3.4]	13.00	15.50	76	1,100 [519]
	RCFL-A*3821 (RGPT-05?BMK?)	37,200 [10.9]	25,750 [7.5]	11,450 [3.4]	12.50	15.10	76	1,100 [519]
	RCFL-A*3821 (RGPT-07?AME?)	37,200 [10.9]	25,700 [7.5]	11,500 [3.4]	12.50	15.10	76	1,100 [519]
	ROCA-070E03 (RCFL-A*3821)	37,600 [11.0]	26,600 [7.8]	11,000 [3.2]	12.50	15.10	76	1,200 [566]
	ROCA-070E04 (RCFL-A*3821)	37,600 [11.0]	26,600 [7.8]	11,000 [3.2]	12.50	15.10	76	1,200 [566]
	ROLA-070E03 (RCFL-A*3821)	37,600 [11.0]	26,400 [7.7]	11,200 [3.3]	13.00	15.50	76	1,175 [554]
	ROLA-070E04 (RCFL-A*3821)	37,600 [11.0]	26,400 [7.7]	11,200 [3.3]	13.00	15.50	76	1,175 [554]
	ROLA-115E05 (RCFL-A*3821)	38,000 [11.1]	26,900 [7.9]	11,100 [3.3]	13.00	15.50	76	1,200 [566]
	RCFL-A*3824 (RGLT-12?ARM?)	37,800 [11.1]	26,450 [7.7]	11,350 [3.3]	13.00	16.00	76	1,150 [543]
	RCFL-A*3824 (RGPT-12?ARM?)	38,000 [11.1]	26,750 [7.8]	11,250 [3.3]	13.00	16.00	76	1,175 [554]
	ROCA-070E03 (RCFL-A*3824)	37,600 [11.0]	26,600 [7.8]	11,000 [3.2]	12.50	15.10	76	1,200 [566]
	ROCA-070E04 (RCFL-A*3824)	37,600 [11.0]	26,600 [7.8]	11,000 [3.2]	12.50	15.10	76	1,200 [566]
	ROLA-070E03 (RCFL-A*3824)	37,600 [11.0]	26,450 [7.7]	11,150 [3.3]	13.00	15.50	76	1,175 [554]
	ROLA-070E04 (RCFL-A*3824)	37,600 [11.0]	26,450 [7.7]	11,150 [3.3]	13.00	15.50	76	1,175 [554]
	ROLA-115E05 (RCFL-A*3824)	37,000 [10.8]	25,250 [7.4]	11,750 [3.4]	13.00	15.50	76	1,050 [495]
	RCFL-H*3617 (-GFD-06?MCK?)	35,000 [10.3]	23,200 [6.8]	11,800 [3.5]	12.00	14.50	76	1,000 [472]
	RCFL-H*3617 (-GFD-07?MCK?)	35,400 [10.4]	23,500 [6.9]	11,900 [3.5]	12.60	15.00	76	1,000 [472]
	RCFL-H*3617 (-GFE-06?MCK?)	35,200 [10.3]	23,350 [6.8]	11,850 [3.5]	12.00	14.50	76	1,000 [472]
	RCFL-H*3617 (-GFE-07?MCK?)	35,400 [10.4]	23,750 [7.0]	11,650 [3.4]	12.00	14.50	76	1,025 [484]
	RCFL-H*3617 (-GGD-06?MCK?)	35,400 [10.4]	23,500 [6.9]	11,900 [3.5]	12.65	15.00	76	1,000 [472]
	RCFL-H*3617 (-GGD-07?MCK?)	35,600 [10.4]	23,900 [7.0]	11,700 [3.4]	12.65	15.00	76	1,025 [484]
	RCFL-H*3617 (-GGE-06?MCK?)	35,600 [10.4]	23,900 [7.0]	11,700 [3.4]	12.50	15.10	76	1,025 [484]

① Highest sales volume tested combination required by D.O.E. test procedures.

[ ] Designates Metric Conversions

Performance Data @ AHRI Standard Conditions—Cooling: UAPM- JAZ (continued)

Model Numbers		80°F [26.5°C] DB/67°F [19.5°C] WB Indoor Air 95°F [35°C] DB Outdoor Air					Sound Rating dB	Indoor CFM [L/s]
Outdoor Unit UAPM-	Indoor Coil and/or Air Handler	Total Capacity BTU/H [kW]	Net Sensible BTU/H [kW]	Net Latent BTU/H [kW]	EER	SEER		
Rev. 6/30/10	RCFL-H*3617 (-GGE-07?MCK?)	35,600 [10.4]	23,900 [7.0]	11,700 [3.4]	12.50	15.10	76	1,025 [484]
	RCFL-H*3617 (-GJD-06?MCK?)	35,400 [10.4]	23,500 [6.9]	11,900 [3.5]	12.65	15.00	76	1,000 [472]
	RCFL-H*3617 (-GJD-07?MCK?)	35,600 [10.4]	23,900 [7.0]	11,700 [3.4]	12.65	15.00	76	1,025 [484]
	RCFL-H*3617 (-GJF-06?MCK?)	35,600 [10.4]	23,900 [7.0]	11,700 [3.4]	12.50	15.10	76	1,025 [484]
	RCFL-H*3617 (-GJF-07?MCK?)	35,600 [10.4]	23,900 [7.0]	11,700 [3.4]	12.50	15.10	76	1,025 [484]
	RCFL-H*3617 (-GLE-07?AMK?)	35,800 [10.5]	24,100 [7.1]	11,700 [3.4]	12.50	15.10	76	1,025 [484]
	RCFL-H*3617 (-GLR-07?AMK?)	35,800 [10.5]	24,050 [7.0]	11,750 [3.4]	12.95	15.10	76	1,025 [484]
	RCFL-H*3617 (RGLT-07?AME?)	35,600 [10.4]	23,900 [7.0]	11,700 [3.4]	12.50	15.10	76	1,050 [495]
	RCFL-H*3617 (-GPR-05?BMK?)	35,400 [10.4]	23,500 [6.9]	11,900 [3.5]	12.20	14.50	76	1,000 [472]
	RCFL-H*3617 (-GPR-07?AMK?)	35,400 [10.4]	23,450 [6.9]	11,950 [3.5]	12.80	15.10	76	1,000 [472]
	RCFL-H*3617 (RGPT-05?BMK?)	35,400 [10.4]	23,750 [7.0]	11,650 [3.4]	12.00	14.50	76	1,050 [495]
	RCFL-H*3617 (RGPT-07?AME?)	35,600 [10.4]	23,900 [7.0]	11,700 [3.4]	12.50	15.00	76	1,050 [495]
	RCFL-H*3617 (-GRM-04?MAE?)	35,600 [10.4]	23,950 [7.0]	11,650 [3.4]	12.50	14.50	76	1,025 [484]
	RCFL-H*3617 (-GRM-06?MAE?)	35,400 [10.4]	23,500 [6.9]	11,900 [3.5]	12.55	14.50	76	1,000 [472]
	RCFL-H*3617 (-GRM-07?MAE?)	35,400 [10.4]	23,800 [7.0]	11,600 [3.4]	12.25	14.50	76	1,025 [484]
	RCFL-H*3617 (-GTM-06?MAE?)	35,600 [10.4]	23,950 [7.0]	11,650 [3.4]	12.00	14.50	76	1,025 [484]
	ROCA-070E03 (RCFL-H*3617)	36,200 [10.6]	25,250 [7.4]	10,950 [3.2]	12.00	14.50	76	1,200 [566]
	ROCA-070E04 (RCFL-H*3617)	36,200 [10.6]	25,250 [7.4]	10,950 [3.2]	12.00	14.50	76	1,200 [566]
	ROLA-070E03 (RCFL-H*3617)	36,200 [10.6]	25,050 [7.3]	11,150 [3.3]	12.50	15.00	76	1,175 [554]
	ROLA-070E04 (RCFL-H*3617)	35,800 [10.5]	24,100 [7.1]	11,700 [3.4]	12.50	15.10	76	1,025 [484]
	RCFL-H*3621	35,200 [10.3]	23,650 [6.9]	11,550 [3.4]	12.00	14.50	76	1,050 [495]
	RCFL-H*3621 (-GFD-06?MCK?)	35,200 [10.3]	23,400 [6.9]	11,800 [3.5]	12.00	14.50	76	1,000 [472]
	RCFL-H*3621 (-GFD-07?MCK?)	35,400 [10.4]	23,500 [6.9]	11,900 [3.5]	12.65	15.00	76	1,000 [472]
	RCFL-H*3621 (-GFD-09?ZCM?)	36,200 [10.6]	24,900 [7.3]	11,300 [3.3]	12.80	15.10	76	1,150 [543]
	RCFL-H*3621 (-GFD-10?ZCM?)	36,400 [10.7]	25,250 [7.4]	11,150 [3.3]	12.60	15.00	76	1,175 [554]
	RCFL-H*3621 (-GFE-06?MCK?)	35,200 [10.3]	23,350 [6.8]	11,850 [3.5]	12.00	14.50	76	1,000 [472]
036JAZ	RCFL-H*3621 (-GFE-07?MCK?)	35,600 [10.4]	23,950 [7.0]	11,650 [3.4]	12.00	14.50	76	1,025 [484]
	RCFL-H*3621 (-GFE-09?ZCM?)	35,800 [10.5]	24,100 [7.1]	11,700 [3.4]	12.50	15.10	76	1,025 [484]
	RCFL-H*3621 (-GFE-10?ZCM?)	35,600 [10.4]	23,900 [7.0]	11,700 [3.4]	12.50	15.10	76	1,025 [484]
	RCFL-H*3621 (-GGD-06?MCK?)	35,400 [10.4]	23,500 [6.9]	11,900 [3.5]	12.70	15.00	76	1,000 [472]
	RCFL-H*3621 (-GGD-07?MCK?)	35,800 [10.5]	24,100 [7.1]	11,700 [3.4]	12.70	15.10	76	1,025 [484]
	RCFL-H*3621 (-GGD-09?ZCM?)	36,400 [10.7]	25,250 [7.4]	11,150 [3.3]	12.80	15.10	76	1,175 [554]
	RCFL-H*3621 (-GGD-10?ZCM?)	36,400 [10.7]	25,200 [7.4]	11,200 [3.3]	12.85	15.10	76	1,175 [554]
	RCFL-H*3621 (-GGE-06?MCK?)	35,600 [10.4]	23,900 [7.0]	11,700 [3.4]	12.50	15.10	76	1,025 [484]
	RCFL-H*3621 (-GGE-07?MCK?)	35,600 [10.4]	23,900 [7.0]	11,700 [3.4]	12.50	15.10	76	1,025 [484]
	RCFL-H*3621 (-GGE-09?ZCM?)	35,800 [10.5]	24,050 [7.0]	11,750 [3.4]	12.50	15.10	76	1,025 [484]
	RCFL-H*3621 (-GGE-10?ZCM?)	35,600 [10.4]	23,900 [7.0]	11,700 [3.4]	12.50	15.10	76	1,050 [495]
	RCFL-H*3621 (-GJD-06?MCK?)	35,400 [10.4]	23,500 [6.9]	11,900 [3.5]	12.70	15.00	76	1,000 [472]
	RCFL-H*3621 (-GJD-07?MCK?)	35,800 [10.5]	24,100 [7.1]	11,700 [3.4]	12.70	15.10	76	1,025 [484]
	RCFL-H*3621 (-GJD-09?ZCM?)	36,400 [10.7]	25,250 [7.4]	11,150 [3.3]	12.80	15.10	76	1,175 [554]
	RCFL-H*3621 (-GJD-10?ZCM?)	36,400 [10.7]	25,200 [7.4]	11,200 [3.3]	12.85	15.10	76	1,175 [554]
	RCFL-H*3621 (-GJF-06?MCK?)	35,600 [10.4]	23,900 [7.0]	11,700 [3.4]	12.50	15.10	76	1,025 [484]
	RCFL-H*3621 (-GJF-07?MCK?)	35,600 [10.4]	23,900 [7.0]	11,700 [3.4]	12.50	15.10	76	1,025 [484]
	RCFL-H*3621 (-GJF-09?ZCM?)	35,800 [10.5]	24,050 [7.0]	11,750 [3.4]	12.50	15.10	76	1,025 [484]
	RCFL-H*3621 (-GJF-10?ZCM?)	35,600 [10.4]	23,900 [7.0]	11,700 [3.4]	12.50	15.10	76	1,050 [495]
	RCFL-H*3621 (-GLE-07?AMK?)	35,800 [10.5]	24,050 [7.0]	11,750 [3.4]	12.50	15.10	76	1,025 [484]
	RCFL-H*3621 (RGLE-07?BRQ?)	35,800 [10.5]	24,050 [7.0]	11,750 [3.4]	13.00	15.50	76	1,025 [484]
	RCFL-H*3621 (-GLE-10?BRM?)	35,800 [10.5]	24,000 [7.0]	11,800 [3.5]	13.00	15.50	76	1,050 [495]
	RCFL-H*3621 (UGLL-07?BRQ?)	35,800 [10.5]	23,800 [7.0]	12,000 [3.5]	13.20	15.50	76	1,000 [472]
	RCFL-H*3621 (-GLR-07?AMK?)	35,800 [10.5]	24,050 [7.0]	11,750 [3.4]	13.05	15.50	76	1,025 [484]
	RCFL-H*3621 (-GLR-07?BRQ?)	35,800 [10.5]	23,800 [7.0]	12,000 [3.5]	13.20	15.50	76	1,000 [472]
	RCFL-H*3621 (-GLR-10?BRM?)	35,800 [10.5]	24,050 [7.0]	11,750 [3.4]	13.00	15.50	76	1,050 [495]
	RCFL-H*3621 (RGLT-07?AME?)	35,600 [10.4]	23,900 [7.0]	11,700 [3.4]	12.50	15.10	76	1,075 [507]

① Highest sales volume tested combination required by D.O.E. test procedures.

[ ] Designates Metric Conversions

Performance Data @ AHRI Standard Conditions—Cooling: UAPM- JAZ (continued)

Model Numbers		80°F [26.5°C] DB/67°F [19.5°C] WB Indoor Air 95°F [35°C] DB Outdoor Air					Sound Rating dB	Indoor CFM [L/s]
Outdoor Unit UAPM-	Indoor Coil and/or Air Handler	Total Capacity BTU/H [kW]	Net Sensible BTU/H [kW]	Net Latent BTU/H [kW]	EER	SEER		
Rev. 6/30/10	RCFL-H*3621 (RGLT-07?BRQ?)	36,400 [10.7]	25,350 [7.4]	11,050 [3.2]	12.50	15.10	76	1,200 [566]
	RCFL-H*3621 (RGLT-10?BRM?)	36,400 [10.7]	25,200 [7.4]	11,200 [3.3]	12.50	15.10	76	1,175 [554]
	RCFL-H*3621 (-GPE-07?BRQ?)	35,800 [10.5]	24,050 [7.0]	11,750 [3.4]	13.00	15.50	76	1,025 [484]
	RCFL-H*3621 (-GPE-10?BRM?)	35,800 [10.5]	24,050 [7.0]	11,750 [3.4]	13.00	15.50	76	1,075 [507]
	RCFL-H*3621 (-GPR-05?BMK?)	35,400 [10.4]	23,500 [6.9]	11,900 [3.5]	12.20	14.50	76	1,000 [472]
	RCFL-H*3621 (-GPR-07?AMK?)	35,600 [10.4]	23,650 [6.9]	11,950 [3.5]	12.85	15.10	76	1,000 [472]
	RCFL-H*3621 (-GPR-07?BRQ?)	35,800 [10.5]	23,800 [7.0]	12,000 [3.5]	13.20	15.50	76	1,000 [472]
	RCFL-H*3621 (-GPR-10?BRM?)	35,800 [10.5]	24,050 [7.0]	11,750 [3.4]	12.50	15.10	76	1,075 [507]
	RCFL-H*3621 (RGPT-05?BMK?)	35,600 [10.4]	23,950 [7.0]	11,650 [3.4]	12.00	14.50	76	1,075 [507]
	RCFL-H*3621 (RGPT-07?AME?)	35,600 [10.4]	23,900 [7.0]	11,700 [3.4]	12.50	15.10	76	1,050 [495]
	RCFL-H*3621 (RGPT-07?BRQ?)	36,000 [10.5]	24,200 [7.1]	11,800 [3.5]	13.00	15.50	76	1,050 [495]
	RCFL-H*3621 (RGPT-10?BRM?)	36,400 [10.7]	25,200 [7.4]	11,200 [3.3]	12.50	15.10	76	1,175 [554]
	RCFL-H*3621 (-GRM-04?MAE?)	35,600 [10.4]	23,950 [7.0]	11,650 [3.4]	12.55	14.50	76	1,025 [484]
	RCFL-H*3621 (-GRM-06?MAE?)	35,400 [10.4]	23,500 [6.9]	11,900 [3.5]	12.60	14.50	76	1,000 [472]
	RCFL-H*3621 (-GRM-07?MAE?)	35,400 [10.4]	23,800 [7.0]	11,600 [3.4]	12.30	14.50	76	1,025 [484]
	RCFL-H*3621 (-GRM-09?ZAJ?)	35,600 [10.4]	23,950 [7.0]	11,650 [3.4]	12.50	15.00	76	1,075 [507]
	RCFL-H*3621 (-GRM-10?ZAJ?)	35,600 [10.4]	23,900 [7.0]	11,700 [3.4]	12.50	15.10	76	1,025 [484]
	RCFL-H*3621 (-GTM-06?MAE?)	35,600 [10.4]	23,950 [7.0]	11,650 [3.4]	12.50	15.00	76	1,025 [484]
	RCFL-H*3621 (-GTM-07?RBG?)	35,800 [10.5]	24,050 [7.0]	11,750 [3.4]	12.50	15.10	76	1,050 [495]
	RCFL-H*3621 (-GTM-09?ZAJ?)	36,000 [10.5]	24,500 [7.2]	11,500 [3.4]	12.50	15.10	76	1,100 [519]
	ROCA-070E03 (RCFL-H*3621)	36,200 [10.6]	25,250 [7.4]	10,950 [3.2]	12.00	14.50	76	1,200 [566]
	ROCA-070E04 (RCFL-H*3621)	36,200 [10.6]	25,250 [7.4]	10,950 [3.2]	12.00	14.50	76	1,200 [566]
	ROLA-070E03 (RCFL-H*3621)	36,200 [10.6]	25,050 [7.3]	11,150 [3.3]	12.50	15.10	76	1,175 [554]
	ROLA-070E04 (RCFL-H*3621)	36,200 [10.6]	25,050 [7.3]	11,150 [3.3]	12.50	15.10	76	1,175 [554]
	ROLA-115E05 (RCFL-H*3621)	36,400 [10.7]	25,350 [7.4]	11,050 [3.2]	12.50	15.10	76	1,200 [566]
	RCFL-H*3621+RXMD-C04	35,400 [10.4]	23,800 [7.0]	11,600 [3.4]	12.20	14.50	76	1,050 [495]
036JAZ	RCFL-H*3821	36,400 [10.7]	24,800 [7.3]	11,600 [3.4]	12.00	14.50	76	1,050 [495]
	RCFL-H*3821 (-GFD-09?ZCM?)	37,600 [11.0]	26,300 [7.7]	11,300 [3.3]	12.50	15.10	76	1,150 [543]
	RCFL-H*3821 (-GFD-10?ZCM?)	37,600 [11.0]	26,450 [7.7]	11,150 [3.3]	12.50	15.10	76	1,175 [554]
	RCFL-H*3821 (-GFE-09?ZCM?)	37,800 [11.1]	26,800 [7.9]	11,000 [3.2]	12.50	15.10	76	1,200 [566]
	RCFL-H*3821 (-GGD-09?ZCM?)	37,600 [11.0]	26,450 [7.7]	11,150 [3.3]	13.00	15.50	76	1,175 [554]
	RCFL-H*3821 (-GGD-10?ZCM?)	37,600 [11.0]	26,450 [7.7]	11,150 [3.3]	13.00	15.50	76	1,175 [554]
	RCFL-H*3821 (-GGE-06?MCK?)	37,600 [11.0]	26,650 [7.8]	10,950 [3.2]	12.00	14.50	76	1,200 [566]
	RCFL-H*3821 (-GGE-07?MCK?)	37,400 [11.0]	26,450 [7.7]	10,950 [3.2]	12.00	14.50	76	1,200 [566]
	RCFL-H*3821 (-GGE-10?ZCM?)	37,000 [10.8]	25,250 [7.4]	11,750 [3.4]	13.00	15.50	76	1,050 [495]
	RCFL-H*3821 (-GJD-09?ZCM?)	37,600 [11.0]	26,450 [7.7]	11,150 [3.3]	13.00	15.50	76	1,175 [554]
	RCFL-H*3821 (-GJD-10?ZCM?)	37,600 [11.0]	26,450 [7.7]	11,150 [3.3]	13.00	15.50	76	1,175 [554]
	RCFL-H*3821 (-GJF-06?MCK?)	37,600 [11.0]	26,650 [7.8]	10,950 [3.2]	12.00	14.50	76	1,200 [566]
	RCFL-H*3821 (-GJF-07?MCK?)	37,400 [11.0]	26,450 [7.7]	10,950 [3.2]	12.00	14.50	76	1,200 [566]
	RCFL-H*3821 (-GJF-10?ZCM?)	37,800 [11.1]	26,750 [7.8]	11,050 [3.2]	12.50	15.10	76	1,200 [566]
	RCFL-H*3821 (-GLE-07?AMK?)	37,600 [11.0]	26,600 [7.8]	11,000 [3.2]	12.50	15.10	76	1,200 [566]
	RCFL-H*3821 (-GLE-10?BRM?)	38,000 [11.1]	26,900 [7.9]	11,100 [3.3]	13.00	15.50	76	1,200 [566]
	RCFL-H*3821 (-GLR-07?AMK?)	37,600 [11.0]	26,600 [7.8]	11,000 [3.2]	12.50	15.10	76	1,200 [566]
	RCFL-H*3821 (-GLR-10?BRM?)	38,000 [11.1]	26,900 [7.9]	11,100 [3.3]	13.00	15.50	76	1,200 [566]
	RCFL-H*3821 (RGLT-07?AME?)	37,200 [10.9]	25,700 [7.5]	11,500 [3.4]	13.00	15.50	76	1,100 [519]
	RCFL-H*3821 (-GPL-07?BRK?)	37,600 [11.0]	26,600 [7.8]	11,000 [3.2]	12.50	15.10	76	1,200 [566]
	RCFL-H*3821 (-GPR-07?AMK?)	37,600 [11.0]	26,600 [7.8]	11,000 [3.2]	12.00	14.50	76	1,200 [566]
	RCFL-H*3821 (-GPR-07?BRQ?)	38,000 [11.1]	26,900 [7.9]	11,100 [3.3]	13.00	15.50	76	1,200 [566]
	RCFL-H*3821 (-GPR-10?BRM?)	37,000 [10.8]	25,250 [7.4]	11,750 [3.4]	13.00	15.50	76	1,075 [507]
	RCFL-H*3821 (RGPT-05?BMK?)	37,200 [10.9]	25,750 [7.5]	11,450 [3.4]	12.50	15.10	76	1,100 [519]
	RCFL-H*3821 (RGPT-07?AME?)	37,200 [10.9]	25,700 [7.5]	11,500 [3.4]	12.50	15.10	76	1,100 [519]
	RCFL-H*3821 (-GRM-07?YBG?)	36,600 [10.7]	24,950 [7.3]	11,650 [3.4]	12.00	14.50	76	1,050 [495]
	RCFL-H*3821 (-GRM-09?ZAJ?)	37,000 [10.8]	25,300 [7.4]	11,700 [3.4]	12.50	15.10	76	1,075 [507]

① Highest sales volume tested combination required by D.O.E. test procedures.

[ ] Designates Metric Conversions

Performance Data @ AHRI Standard Conditions—Cooling: UAPM- JAZ (continued)

Model Numbers		80°F [26.5°C] DB/67°F [19.5°C] WB Indoor Air 95°F [35°C] DB Outdoor Air					Sound Rating dB	Indoor CFM [L/s]
Outdoor Unit UAPM-	Indoor Coil and/or Air Handler	Total Capacity BTU/H [kW]	Net Sensible BTU/H [kW]	Net Latent BTU/H [kW]	EER	SEER		
Rev. 6/30/10	RCFL-H*3821 (-GRM-10?ZAJ?)	37,400 [11.0]	26,150 [7.7]	11,250 [3.3]	12.50	15.10	76	1,150 [543]
	RCFL-H*3821 (-GTM-06?MAE?)	36,800 [10.8]	25,100 [7.4]	11,700 [3.4]	12.50	15.10	76	1,075 [507]
	RCFL-H*3821 (-GTM-07?RBG?)	37,000 [10.8]	25,250 [7.4]	11,750 [3.4]	13.00	15.50	76	1,050 [495]
	RCFL-H*3821 (-GTM-09?ZAJ?)	37,400 [11.0]	25,850 [7.6]	11,550 [3.4]	13.00	15.50	76	1,100 [519]
	ROCA-070E03 (RCFL-H*3821)	37,600 [11.0]	26,600 [7.8]	11,000 [3.2]	12.50	15.10	76	1,200 [566]
	ROCA-070E04 (RCFL-H*3821)	37,600 [11.0]	26,600 [7.8]	11,000 [3.2]	12.50	15.10	76	1,200 [566]
	ROLA-070E03 (RCFL-H*3821)	37,600 [11.0]	26,400 [7.7]	11,200 [3.3]	13.00	15.50	76	1,175 [554]
	ROLA-070E04 (RCFL-H*3821)	37,600 [11.0]	26,400 [7.7]	11,200 [3.3]	13.00	15.50	76	1,175 [554]
	ROLA-115E05 (RCFL-H*3821)	38,000 [11.1]	26,900 [7.9]	11,100 [3.3]	13.00	15.50	76	1,200 [566]
	RCFL-H*3824	36,400 [10.7]	24,800 [7.3]	11,600 [3.4]	12.00	14.50	76	1,050 [495]
	RCFL-H*3824 (-GFD-09?ZCM?)	37,400 [11.0]	26,100 [7.6]	11,300 [3.3]	12.50	15.10	76	1,150 [543]
	RCFL-H*3824 (-GFD-10?ZCM?)	37,600 [11.0]	26,450 [7.7]	11,150 [3.3]	12.50	15.10	76	1,175 [554]
	RCFL-H*3824 (-GFE-09?ZCM?)	37,600 [11.0]	26,600 [7.8]	11,000 [3.2]	12.50	15.10	76	1,200 [566]
	RCFL-H*3824 (-GGD-09?ZCM?)	37,600 [11.0]	26,450 [7.7]	11,150 [3.3]	13.00	15.50	76	1,175 [554]
	RCFL-H*3824 (-GGD-10?ZCM?)	37,600 [11.0]	26,450 [7.7]	11,150 [3.3]	13.00	15.50	76	1,175 [554]
	RCFL-H*3824 (-GGE-10?ZCM?)	37,800 [11.1]	26,800 [7.9]	11,000 [3.2]	13.00	15.00	76	1,200 [566]
	RCFL-H*3824 (-GGE-12?RCM?)	38,000 [11.1]	26,900 [7.9]	11,100 [3.3]	13.00	15.50	76	1,200 [566]
	RCFL-H*3824 (-GJD-09?ZCM?)	37,600 [11.0]	26,450 [7.7]	11,150 [3.3]	13.00	15.50	76	1,175 [554]
	RCFL-H*3824 (-GJD-10?ZCM?)	37,600 [11.0]	26,450 [7.7]	11,150 [3.3]	13.00	15.50	76	1,175 [554]
	RCFL-H*3824 (-GJF-10?ZCM?)	37,800 [11.1]	26,750 [7.8]	11,050 [3.2]	13.00	15.00	76	1,200 [566]
	RCFL-H*3824 (-GJF-12?RCM?)	38,000 [11.1]	26,900 [7.9]	11,100 [3.3]	13.00	15.50	76	1,200 [566]
	RCFL-H*3824 (-GLE-10?BRM?)	38,000 [11.1]	26,900 [7.9]	11,100 [3.3]	13.00	15.50	76	1,200 [566]
	RCFL-H*3824 (-GLE-12?ARM?)	37,200 [10.9]	25,400 [7.4]	11,800 [3.5]	13.00	16.00	76	1,075 [507]
	RCFL-H*3824 (-GLR-10?BRM?)	38,000 [11.1]	26,900 [7.9]	11,100 [3.3]	13.00	15.50	76	1,200 [566]
	RCFL-H*3824 (-GLR-12?ARM?)	38,000 [11.1]	26,900 [7.9]	11,100 [3.3]	13.00	15.50	76	1,200 [566]
	RCFL-H*3824 (RGLT-12?ARM?)	37,800 [11.1]	26,450 [7.7]	11,350 [3.3]	13.00	16.00	76	1,150 [543]
036JAZ	RCFL-H*3824 (-GPE-10?BRM?)	37,200 [10.9]	25,400 [7.4]	11,800 [3.5]	13.00	16.00	76	1,075 [507]
	RCFL-H*3824 (-GPE-12?ARM?)	37,200 [10.9]	25,400 [7.4]	11,800 [3.5]	13.00	16.00	76	1,075 [507]
	RCFL-H*3824 (-GPR-07?BRQ?)	38,000 [11.1]	26,900 [7.9]	11,100 [3.3]	13.00	15.50	76	1,200 [566]
	RCFL-H*3824 (-GPR-10?BRM?)	37,000 [10.8]	25,250 [7.4]	11,750 [3.4]	13.00	15.50	76	1,075 [507]
	RCFL-H*3824 (-GPR-12?ARM?)	37,400 [11.0]	25,850 [7.6]	11,550 [3.4]	13.00	15.50	76	1,100 [519]
	RCFL-H*3824 (RGPT-12?ARM?)	38,000 [11.1]	26,750 [7.8]	11,250 [3.3]	13.00	16.00	76	1,175 [554]
	RCFL-H*3824 (-GRM-07?YBG?)	36,600 [10.7]	24,950 [7.3]	11,650 [3.4]	12.00	14.50	76	1,050 [495]
	RCFL-H*3824 (-GRM-09?ZAJ?)	36,800 [10.8]	25,100 [7.4]	11,700 [3.4]	12.50	15.10	76	1,075 [507]
	RCFL-H*3824 (-GRM-10?ZAJ?)	37,400 [11.0]	26,150 [7.7]	11,250 [3.3]	12.50	15.10	76	1,150 [543]
	RCFL-H*3824 (-GRM-12?RAJ?)	37,000 [10.8]	25,250 [7.4]	11,750 [3.4]	13.00	15.50	76	1,075 [507]
	RCFL-H*3824 (-GTM-07?RBG?)	37,000 [10.8]	25,250 [7.4]	11,750 [3.4]	13.00	15.50	76	1,050 [495]
	RCFL-H*3824 (-GTM-09?ZAJ?)	37,400 [11.0]	25,850 [7.6]	11,550 [3.4]	13.00	15.50	76	1,100 [519]
	RCFL-H*3824 (-GTM-10?RBJ?)	37,600 [11.0]	26,150 [7.7]	11,450 [3.4]	13.00	15.50	76	1,125 [531]
	ROCA-070E03 (RCFL-H*3824)	37,600 [11.0]	26,600 [7.8]	11,000 [3.2]	12.50	15.10	76	1,200 [566]
	ROCA-070E04 (RCFL-H*3824)	37,600 [11.0]	26,600 [7.8]	11,000 [3.2]	12.50	15.10	76	1,200 [566]
	ROLA-070E03 (RCFL-H*3824)	37,600 [11.0]	26,450 [7.7]	11,150 [3.3]	13.00	15.50	76	1,175 [554]
	ROLA-070E04 (RCFL-H*3824)	37,600 [11.0]	26,450 [7.7]	11,150 [3.3]	13.00	15.50	76	1,175 [554]
	ROLA-115E05 (RCFL-H*3824)	37,000 [10.8]	25,250 [7.4]	11,750 [3.4]	13.00	15.50	76	1,050 [495]
	RCFN-H*3624	39,000 [11.4]	28,700 [8.4]	10,300 [3.0]	12.50	15.00	76	1,200 [566]
	RCFN-H*3624 (-GFD-09?ZCM?)	39,000 [11.4]	28,300 [8.3]	10,700 [3.1]	13.00	16.00	76	1,150 [543]
	RCFN-H*3624 (-GFD-10?ZCM?)	39,500 [11.6]	29,050 [8.5]	10,450 [3.1]	13.00	15.50	76	1,175 [554]
	RCFN-H*3624 (-GFD-12?RCM?)	39,500 [11.6]	29,050 [8.5]	10,450 [3.1]	13.00	15.50	76	1,225 [578]
	RCFN-H*3624 (-GFE-09?ZCM?)	39,500 [11.6]	29,050 [8.5]	10,450 [3.1]	13.00	15.50	76	1,200 [566]
	RCFN-H*3624 (-GFE-10?ZCM?)	39,500 [11.6]	29,100 [8.5]	10,400 [3.0]	13.00	15.50	76	1,225 [578]
	RCFN-H*3624 (-GFE-12?RCM?)	39,500 [11.6]	29,050 [8.5]	10,450 [3.1]	13.00	16.00	76	1,225 [578]
	RCFN-H*3624 (-GGD-09?ZCM?)	39,500 [11.6]	29,050 [8.5]	10,450 [3.1]	13.00	16.00	76	1,175 [554]
	RCFN-H*3624 (-GGD-10?ZCM?)	39,500 [11.6]	29,050 [8.5]	10,450 [3.1]	13.00	16.00	76	1,175 [554]

① Highest sales volume tested combination required by D.O.E. test procedures.

[ ] Designates Metric Conversions

Performance Data @ AHRI Standard Conditions—Cooling: UAPM- JAZ (continued)

Model Numbers		80°F [26.5°C] DB/67°F [19.5°C] WB Indoor Air 95°F [35°C] DB Outdoor Air					Sound Rating dB	Indoor CFM [L/s]
Outdoor Unit UAPM-	Indoor Coil and/or Air Handler	Total Capacity BTU/H [kW]	Net Sensible BTU/H [kW]	Net Latent BTU/H [kW]	EER	SEER		
Rev. 6/30/10	RCFN-H*3624 (-GGD-12?RCM?)	39,500 [11.6]	29,000 [8.5]	10,500 [3.1]	13.00	16.00	76	1,225 [578]
	RCFN-H*3624 (-GGE-09?ZCM?)	39,500 [11.6]	29,050 [8.5]	10,450 [3.1]	13.00	15.50	76	1,225 [578]
	RCFN-H*3624 (-GGE-10?ZCM?)	39,500 [11.6]	29,050 [8.5]	10,450 [3.1]	13.00	15.50	76	1,200 [566]
	RCFN-H*3624 (-GGE-12?RCM?)	39,500 [11.6]	29,000 [8.5]	10,500 [3.1]	13.00	16.00	76	1,200 [566]
	RCFN-H*3624 (-GJD-09?ZCM?)	39,500 [11.6]	29,050 [8.5]	10,450 [3.1]	13.00	16.00	76	1,175 [554]
	RCFN-H*3624 (-GJD-10?ZCM?)	39,500 [11.6]	29,050 [8.5]	10,450 [3.1]	13.00	16.00	76	1,175 [554]
	RCFN-H*3624 (-GJD-12?RCM?)	39,500 [11.6]	29,000 [8.5]	10,500 [3.1]	13.00	16.00	76	1,225 [578]
	RCFN-H*3624 (-GJF-09?ZCM?)	39,500 [11.6]	29,050 [8.5]	10,450 [3.1]	13.00	15.50	76	1,225 [578]
	RCFN-H*3624 (-GJF-10?ZCM?)	39,500 [11.6]	29,050 [8.5]	10,450 [3.1]	13.00	15.50	76	1,200 [566]
	RCFN-H*3624 (-GJF-12?RCM?)	39,500 [11.6]	29,000 [8.5]	10,500 [3.1]	13.00	16.00	76	1,200 [566]
	RCFN-H*3624 (-GLE-07?BRQ?)	39,500 [11.6]	29,000 [8.5]	10,500 [3.1]	13.00	16.00	76	1,225 [578]
	RCFN-H*3624 (-GLE-10?BRM?)	39,500 [11.6]	29,000 [8.5]	10,500 [3.1]	13.00	16.00	76	1,200 [566]
	RCFN-H*3624 (-GLE-12?ARM?)	39,500 [11.6]	29,000 [8.5]	10,500 [3.1]	13.00	16.00	76	1,225 [578]
	RCFN-H*3624 (-GLR-07?BRQ?)	39,500 [11.6]	29,000 [8.5]	10,500 [3.1]	13.00	16.00	76	1,225 [578]
	RCFN-H*3624 (-GLR-10?BRM?)	39,500 [11.6]	29,000 [8.5]	10,500 [3.1]	13.00	16.00	76	1,200 [566]
	RCFN-H*3624 (-GLR-12?ARM?)	39,500 [11.6]	29,000 [8.5]	10,500 [3.1]	13.00	16.00	76	1,200 [566]
	RCFN-H*3624 (RGLT-07?BRQ?)	40,000 [11.7]	29,900 [8.8]	10,100 [3.0]	13.00	16.00	76	1,275 [602]
	RCFN-H*3624 (RGLT-10?BRM?)	40,000 [11.7]	29,900 [8.8]	10,100 [3.0]	13.00	16.00	76	1,275 [602]
	RCFN-H*3624 (RGLT-12?ARM?)	40,000 [11.7]	29,450 [8.6]	10,550 [3.1]	13.00	16.50	76	1,200 [566]
	RCFN-H*3624 (-GPE-07?BRQ?)	39,500 [11.6]	29,000 [8.5]	10,500 [3.1]	13.00	16.00	76	1,225 [578]
	RCFN-H*3624 (-GPE-10?BRM?)	39,500 [11.6]	29,000 [8.5]	10,500 [3.1]	13.00	16.00	76	1,225 [578]
	RCFN-H*3624 (-GPE-12?ARM?)	39,500 [11.6]	29,000 [8.5]	10,500 [3.1]	13.00	16.00	76	1,200 [566]
	RCFN-H*3624 (-GPR-07?BRQ?)	39,500 [11.6]	29,000 [8.5]	10,500 [3.1]	13.00	16.00	76	1,225 [578]
	RCFN-H*3624 (-GPR-10?BRM?)	39,500 [11.6]	29,050 [8.5]	10,450 [3.1]	13.00	16.00	76	1,200 [566]
	RCFN-H*3624 (-GPR-12?ARM?)	40,000 [11.7]	29,750 [8.7]	10,250 [3.0]	13.00	16.00	76	1,250 [590]
	RCFN-H*3624 (RGPT-07?BRQ?)	40,000 [11.7]	29,900 [8.8]	10,100 [3.0]	13.00	16.00	76	1,275 [602]
036JAZ	RCFN-H*3624 (RGPT-10?BRM?)	40,000 [11.7]	29,750 [8.7]	10,250 [3.0]	13.00	16.00	76	1,250 [590]
	RCFN-H*3624 (RGPT-12?ARM?)	39,500 [11.6]	29,000 [8.5]	10,500 [3.1]	13.00	16.00	76	1,200 [566]
	RCFN-H*3624 (-GRM-09?ZAJ?)	39,000 [11.4]	28,600 [8.4]	10,400 [3.0]	13.00	15.50	76	1,225 [578]
	RCFN-H*3624 (-GRM-10?ZAJ?)	39,000 [11.4]	28,350 [8.3]	10,650 [3.1]	13.00	15.50	76	1,150 [543]
	RCFN-H*3624 (-GRM-12?RAJ?)	39,500 [11.6]	29,050 [8.5]	10,450 [3.1]	13.00	15.50	76	1,225 [578]
	ROCA-070E03 (RCFN-H*3624)	39,500 [11.6]	29,100 [8.5]	10,400 [3.0]	13.00	15.50	76	1,200 [566]
	ROCA-070E04 (RCFN-H*3624)	39,500 [11.6]	29,100 [8.5]	10,400 [3.0]	13.00	15.50	76	1,200 [566]
	ROLA-070E03 (RCFN-H*3624)	39,500 [11.6]	29,000 [8.5]	10,500 [3.1]	13.00	16.00	76	1,175 [554]
	ROLA-070E04 (RCFN-H*3624)	39,500 [11.6]	29,000 [8.5]	10,500 [3.1]	13.00	16.00	76	1,175 [554]
	ROLA-115E05 (RCFN-H*3624)	39,500 [11.6]	29,000 [8.5]	10,500 [3.1]	13.00	16.00	76	1,200 [566]
	-BHP-21 (RCHL-36A*)	35,600 [10.4]	24,100 [7.1]	11,500 [3.4]	12.85	15.00	76	1,225 [578]
	-BHP-21 (RCHL-36A1)	35,600 [10.4]	24,100 [7.1]	11,500 [3.4]	12.80	15.00	76	1,200 [566]
	RCQD-3621	36,200 [10.6]	24,950 [7.3]	11,250 [3.3]	12.00	14.00	76	1,045 [493]
	RCQD-3621 (-GFD-09?ZCM?)	37,200 [10.9]	26,250 [7.7]	10,950 [3.2]	12.50	15.10	76	1,150 [543]
	RCQD-3621 (-GFD-10?ZCM?)	37,200 [10.9]	26,400 [7.7]	10,800 [3.2]	12.00	14.50	76	1,175 [554]
	RCQD-3621 (-GFE-09?ZCM?)	37,400 [11.0]	26,750 [7.8]	10,650 [3.1]	12.50	15.10	76	1,200 [566]
	RCQD-3621 (-GJD-09?ZCM?)	37,400 [11.0]	26,600 [7.8]	10,800 [3.2]	12.50	15.10	76	1,175 [554]
	RCQD-3621 (-GJD-10?ZCM?)	37,400 [11.0]	26,600 [7.8]	10,800 [3.2]	12.50	15.10	76	1,175 [554]
	RCQD-3621 (-GJF-06?MCK?)	37,200 [10.9]	26,600 [7.8]	10,600 [3.1]	12.00	14.50	76	1,200 [566]
	RCQD-3621 (-GJF-07?MCK?)	37,200 [10.9]	26,600 [7.8]	10,600 [3.1]	12.00	14.00	76	1,200 [566]
	RCQD-3621 (-GJF-10?ZCM?)	37,400 [11.0]	26,700 [7.8]	10,700 [3.1]	12.50	15.10	76	1,200 [566]
	RCQD-3621 (-GPE-05?BMK?)	37,200 [10.9]	26,600 [7.8]	10,600 [3.1]	12.00	14.50	76	1,200 [566]
	RCQD-3621 (-GPE-07?BRQ?)	36,800 [10.8]	25,350 [7.4]	11,450 [3.4]	13.00	15.50	76	1,050 [495]
	RCQD-3621 (-GPE-10?BRM?)	37,000 [10.8]	25,650 [7.5]	11,350 [3.3]	13.00	15.50	76	1,075 [507]
	RCQD-3621 (-GPR-07?AMK?)	37,200 [10.9]	26,550 [7.8]	10,650 [3.1]	12.00	14.50	76	1,200 [566]
	RCQD-3621 (-GPR-07?BRQ?)	36,800 [10.8]	25,350 [7.4]	11,450 [3.4]	13.00	15.50	76	1,050 [495]
	RCQD-3621 (-GPR-10?BRM?)	37,000 [10.8]	25,700 [7.5]	11,300 [3.3]	13.00	15.50	76	1,075 [507]

① Highest sales volume tested combination required by D.O.E. test procedures.

[ ] Designates Metric Conversions

Performance Data @ AHRI Standard Conditions—Cooling: UAPM- JAZ (continued)

Model Numbers		80°F [26.5°C] DB/67°F [19.5°C] WB Indoor Air 95°F [35°C] DB Outdoor Air					Sound Rating dB	Indoor CFM [L/s]
Outdoor Unit UAPM-	Indoor Coil and/or Air Handler	Total Capacity BTU/H [kW]	Net Sensible BTU/H [kW]	Net Latent BTU/H [kW]	EER	SEER		
Rev. 6/30/10	RCQD-3621 (RGPT-05?BMK?)	36,800 [10.8]	25,700 [7.5]	11,100 [3.3]	12.00	14.50	76	1,100 [519]
	RCQD-3621 (RGPT-07?AME?)	37,000 [10.8]	25,850 [7.6]	11,150 [3.3]	12.50	15.10	76	1,100 [519]
	RCQD-3621 (RGPT-07?BRQ?)	37,000 [10.8]	25,500 [7.5]	11,500 [3.4]	13.00	15.50	76	1,050 [495]
	RCQD-3621 (RGPT-10?BRM?)	37,000 [10.8]	25,500 [7.5]	11,500 [3.4]	13.00	15.50	76	1,050 [495]
	RCQD-3621 (-GRM-06?MAE?)	37,600 [11.0]	27,750 [8.1]	9,850 [2.9]	12.50	14.00	76	1,175 [554]
	RCQD-3621 (-GRM-07?YBG?)	36,400 [10.7]	25,100 [7.4]	11,300 [3.3]	12.00	14.50	76	1,050 [495]
	RCQD-3621 (-GRM-09?ZAJ?)	36,800 [10.8]	25,550 [7.5]	11,250 [3.3]	12.50	15.10	76	1,075 [507]
	RCQD-3621 (-GRM-10?ZAJ?)	37,800 [11.1]	27,700 [8.1]	10,100 [3.0]	13.20	15.00	76	1,150 [543]
	ROCA-070E03 (RCQD-3621)	37,400 [11.0]	26,750 [7.8]	10,650 [3.1]	12.00	14.50	76	1,200 [566]
	ROCA-070E04 (RCQD-3621)	37,400 [11.0]	26,750 [7.8]	10,650 [3.1]	12.00	14.50	76	1,200 [566]
	ROLA-070E03 (RCQD-3621)	37,400 [11.0]	26,550 [7.8]	10,850 [3.2]	12.50	15.10	76	1,175 [554]
	ROLA-070E04 (RCQD-3621)	37,400 [11.0]	26,550 [7.8]	10,850 [3.2]	12.50	15.10	76	1,175 [554]
	ROLA-115E05 (RCQD-3621)	36,800 [10.8]	25,350 [7.4]	11,450 [3.4]	13.00	15.50	76	1,050 [495]
	RCQD-3621A*	36,200 [10.6]	24,950 [7.3]	11,250 [3.3]	12.25	14.00	76	1,045 [493]
	RCQD-3621A* (-GFD-06?MCK?)	36,200 [10.6]	24,700 [7.2]	11,500 [3.4]	12.60	14.50	76	1,000 [472]
	RCQD-3621A* (-GFD-07?MCK?)	36,200 [10.6]	24,650 [7.2]	11,550 [3.4]	12.80	14.50	76	1,000 [472]
	RCQD-3621A* (-GFD-09?ZCM?)	37,200 [10.9]	26,300 [7.7]	10,900 [3.2]	13.05	15.10	76	1,150 [543]
	RCQD-3621A* (-GFD-10?ZCM?)	37,200 [10.9]	26,450 [7.7]	10,750 [3.1]	12.90	15.00	76	1,175 [554]
	RCQD-3621A* (-GJD-06?MCK?)	36,400 [10.7]	24,850 [7.3]	11,550 [3.4]	12.90	15.00	76	1,000 [472]
	RCQD-3621A* (-GJD-07?MCK?)	36,600 [10.7]	25,250 [7.4]	11,350 [3.3]	12.95	15.10	76	1,025 [484]
	RCQD-3621A* (-GJD-09?ZCM?)	37,400 [11.0]	26,600 [7.8]	10,800 [3.2]	13.10	15.10	76	1,175 [554]
	RCQD-3621A* (-GJD-10?ZCM?)	37,400 [11.0]	26,600 [7.8]	10,800 [3.2]	13.10	15.10	76	1,175 [554]
	RCQD-3621A* (-GPR-05?BMK?)	36,200 [10.6]	24,650 [7.2]	11,550 [3.4]	12.75	14.50	76	1,000 [472]
	RCQD-3621A* (-GPR-07?AMK?)	36,400 [10.7]	24,800 [7.3]	11,600 [3.4]	13.05	15.10	76	1,000 [472]
	RCQD-3621A* (-GPR-07?BRQ?)	36,600 [10.7]	24,950 [7.3]	11,650 [3.4]	13.40	15.50	76	1,000 [472]
	RCQD-3624	36,200 [10.6]	24,950 [7.3]	11,250 [3.3]	12.00	14.00	76	1,045 [493]
036JAZ	RCQD-3624 (-GFD-09?ZCM?)	37,200 [10.9]	26,250 [7.7]	10,950 [3.2]	12.50	15.10	76	1,150 [543]
	RCQD-3624 (-GFD-10?ZCM?)	37,400 [11.0]	26,600 [7.8]	10,800 [3.2]	13.00	15.00	76	1,175 [554]
	RCQD-3624 (-GFE-09?ZCM?)	37,400 [11.0]	26,700 [7.8]	10,700 [3.1]	12.50	15.10	76	1,200 [566]
	RCQD-3624 (-GJD-09?ZCM?)	37,400 [11.0]	26,550 [7.8]	10,850 [3.2]	12.50	15.10	76	1,175 [554]
	RCQD-3624 (-GJD-10?ZCM?)	37,400 [11.0]	26,550 [7.8]	10,850 [3.2]	12.50	15.10	76	1,175 [554]
	RCQD-3624 (-GJF-10?ZCM?)	37,400 [11.0]	26,700 [7.8]	10,700 [3.1]	12.50	15.10	76	1,200 [566]
	RCQD-3624 (-GJF-12?RCM?)	37,600 [11.0]	26,850 [7.9]	10,750 [3.1]	13.00	15.50	76	1,200 [566]
	RCQD-3624 (-GPE-07?BRQ?)	36,800 [10.8]	25,350 [7.4]	11,450 [3.4]	13.00	15.50	76	1,050 [495]
	RCQD-3624 (-GPE-10?BRM?)	37,000 [10.8]	25,650 [7.5]	11,350 [3.3]	13.00	15.50	76	1,075 [507]
	RCQD-3624 (-GPE-12?ARM?)	37,200 [10.9]	25,850 [7.6]	11,350 [3.3]	13.00	15.50	76	1,075 [507]
	RCQD-3624 (-GPR-07?BRQ?)	36,800 [10.8]	25,300 [7.4]	11,500 [3.4]	13.00	15.50	76	1,050 [495]
	RCQD-3624 (-GPR-10?BRM?)	37,000 [10.8]	25,700 [7.5]	11,300 [3.3]	13.00	15.50	76	1,075 [507]
	RCQD-3624 (-GPR-12?ARM?)	37,200 [10.9]	25,950 [7.6]	11,250 [3.3]	13.00	15.50	76	1,100 [519]
	RCQD-3624 (RGPT-07?BRQ?)	37,000 [10.8]	25,500 [7.5]	11,500 [3.4]	13.00	15.50	76	1,050 [495]
	RCQD-3624 (RGPT-10?BRM?)	37,200 [10.9]	25,850 [7.6]	11,350 [3.3]	13.00	15.50	76	1,075 [507]
	RCQD-3624 (-GRM-07?YBG?)	36,400 [10.7]	25,050 [7.3]	11,350 [3.3]	12.00	14.50	76	1,050 [495]
	RCQD-3624 (-GRM-09?ZAJ?)	36,800 [10.8]	25,550 [7.5]	11,250 [3.3]	12.50	15.10	76	1,075 [507]
	RCQD-3624 (-GRM-10?ZAJ?)	38,000 [11.1]	27,800 [8.1]	10,200 [3.0]	13.35	15.10	76	1,150 [543]
	RCQD-3624 (-GRM-12?RAJ?)	37,000 [10.8]	25,700 [7.5]	11,300 [3.3]	13.00	15.50	76	1,075 [507]
	ROCA-070E03 (RCQD-3624)	37,400 [11.0]	26,750 [7.8]	10,650 [3.1]	12.50	15.00	76	1,200 [566]
	ROCA-070E04 (RCQD-3624)	37,400 [11.0]	26,750 [7.8]	10,650 [3.1]	12.50	15.00	76	1,200 [566]
	ROLA-070E03 (RCQD-3624)	37,400 [11.0]	26,550 [7.8]	10,850 [3.2]	12.50	15.10	76	1,175 [554]
	ROLA-070E04 (RCQD-3624)	37,400 [11.0]	26,550 [7.8]	10,850 [3.2]	12.50	15.10	76	1,175 [554]
	ROLA-115E05 (RCQD-3624)	36,800 [10.8]	25,350 [7.4]	11,450 [3.4]	13.00	15.50	76	1,050 [495]
	RCQD-3624A*	36,200 [10.6]	24,950 [7.3]	11,250 [3.3]	12.25	14.00	76	1,045 [493]
	RCQD-3624A* (-GFD-09?ZCM?)	37,200 [10.9]	26,300 [7.7]	10,900 [3.2]	13.15	15.10	76	1,150 [543]
	RCQD-3624A* (-GFD-10?ZCM?)	37,400 [11.0]	26,600 [7.8]	10,800 [3.2]	13.00	15.00	76	1,175 [554]

① Highest sales volume tested combination required by D.O.E. test procedures.

[ ] Designates Metric Conversions

Performance Data @ AHRI Standard Conditions—Cooling: UAPM- JAZ (continued)

Model Numbers		80°F [26.5°C] DB/67°F [19.5°C] WB Indoor Air 95°F [35°C] DB Outdoor Air					Sound Rating dB	Indoor CFM [L/s]
Outdoor Unit UAPM-	Indoor Coil and/or Air Handler	Total Capacity BTU/H [kW]	Net Sensible BTU/H [kW]	Net Latent BTU/H [kW]	EER	SEER		
Rev. 6/30/10	RCQD-3624A* (-GJD-09?ZCM?)	37,400 [11.0]	26,600 [7.8]	10,800 [3.2]	13.15	15.10	76	1,175 [554]
	RCQD-3624A* (-GJD-10?ZCM?)	37,400 [11.0]	26,600 [7.8]	10,800 [3.2]	13.15	15.10	76	1,175 [554]
	RCQD-3624A* (-GPR-07?BRQ?)	36,600 [10.7]	24,950 [7.3]	11,650 [3.4]	13.45	15.50	76	1,000 [472]
	-HKL-HM3617 (RCSL-H*3617)	36,000 [10.5]	24,200 [7.1]	11,800 [3.5]	13.20	15.50	76	1,025 [484]
036JAZ	-HLL-HM3617 (RCSL-H*3617)	35,800 [10.5]	23,800 [7.0]	12,000 [3.5]	13.25	15.50	76	1,000 [472]
	-HSL-HM3617 (RCSL-H*3617)	35,600 [10.4]	24,200 [7.1]	11,400 [3.3]	12.35	14.50	76	1,100 [519]
	-HKL-HM3821 (RCSL-H*3821)	38,000 [11.1]	26,900 [7.9]	11,100 [3.3]	13.00	16.00	76	1,200 [566]
	-HLL-HM3821 (RCSL-H*3821)	37,800 [11.1]	26,600 [7.8]	11,200 [3.3]	13.00	16.00	76	1,175 [554]
	RHPN-HM3624 (RCSN-H*3624)	40,000 [11.7]	29,450 [8.6]	10,550 [3.1]	13.00	16.00	76	1,200 [566]
	RCFL-H*4821+RXMD-C04 ①	39,500 [11.6]	27,500 [8.1]	12,000 [3.5]	12.05	14.50	76	1,250 [590]
	RCFL-A*3821 (RGLT-07?AME?)	40,000 [11.7]	27,900 [8.2]	12,100 [3.5]	12.50	15.10	76	1,250 [590]
	RCFL-A*3821 (RGLT-07?BRQ?)	40,000 [11.7]	27,800 [8.1]	12,200 [3.6]	13.00	15.50	76	1,250 [590]
	RCFL-A*3821 (RGLT-10?BRM?)	40,000 [11.7]	27,800 [8.1]	12,200 [3.6]	13.00	15.50	76	1,250 [590]
	RCFL-A*3821 (-GPE-07?AMK?)	40,500 [11.9]	27,900 [8.2]	12,600 [3.7]	12.50	15.10	76	1,225 [578]
	RCFL-A*3821 (RGPT-05?BMK?)	39,500 [11.6]	27,450 [8.0]	12,050 [3.5]	12.00	14.50	76	1,225 [578]
	RCFL-A*3821 (RGPT-07?AME?)	39,500 [11.6]	27,450 [8.0]	12,050 [3.5]	12.00	14.50	76	1,250 [590]
	RCFL-A*3821 (RGPT-07?BRQ?)	40,000 [11.7]	27,800 [8.1]	12,200 [3.6]	13.00	15.50	76	1,250 [590]
	RCFL-A*3821 (RGPT-10?BRM?)	40,000 [11.7]	27,800 [8.1]	12,200 [3.6]	13.00	15.50	76	1,225 [578]
	ROCA-070E03 (RCFL-A*3821)	39,500 [11.6]	27,150 [8.0]	12,350 [3.6]	12.50	15.10	76	1,200 [566]
	ROCA-070E04 (RCFL-A*3821)	39,500 [11.6]	27,150 [8.0]	12,350 [3.6]	12.50	15.10	76	1,200 [566]
	ROLA-070E03 (RCFL-A*3821)	39,500 [11.6]	26,950 [7.9]	12,550 [3.7]	12.50	15.50	76	1,175 [554]
	ROLA-070E04 (RCFL-A*3821)	39,500 [11.6]	26,950 [7.9]	12,550 [3.7]	12.50	15.50	76	1,175 [554]
	RCFL-A*4821 (-GFD-09?ZCM?)	39,500 [11.6]	26,850 [7.9]	12,650 [3.7]	12.85	15.10	76	1,150 [543]
	RCFL-A*4821 (-GFD-10?ZCM?)	39,500 [11.6]	27,000 [7.9]	12,500 [3.7]	12.70	15.10	76	1,175 [554]
	RCFL-A*4821 (-GFE-09?ZCM?)	39,500 [11.6]	27,150 [8.0]	12,350 [3.6]	12.50	15.10	76	1,200 [566]
	RCFL-A*4821 (-GFE-10?ZCM?)	40,000 [11.7]	27,900 [8.2]	12,100 [3.5]	12.50	15.10	76	1,225 [578]
	RCFL-A*4821 (-GGD-06?MCK?)	39,500 [11.6]	27,500 [8.1]	12,000 [3.5]	12.00	14.50	76	1,225 [578]
	RCFL-A*4821 (-GGD-07?MCK?)	39,500 [11.6]	27,500 [8.1]	12,000 [3.5]	12.00	14.50	76	1,225 [578]
	RCFL-A*4821 (-GGD-09?ZCM?)	39,500 [11.6]	27,000 [7.9]	12,500 [3.7]	12.85	15.10	76	1,175 [554]
	RCFL-A*4821 (-GGD-10?ZCM?)	39,500 [11.6]	26,950 [7.9]	12,550 [3.7]	12.85	15.50	76	1,175 [554]
	RCFL-A*4821 (-GGE-06?MCK?)	39,500 [11.6]	27,200 [8.0]	12,300 [3.6]	12.00	14.50	76	1,200 [566]
042JAZ	RCFL-A*4821 (-GGE-07?MCK?)	39,500 [11.6]	27,200 [8.0]	12,300 [3.6]	12.00	14.50	76	1,200 [566]
	RCFL-A*4821 (-GGE-09?ZCM?)	40,000 [11.7]	27,850 [8.2]	12,150 [3.6]	12.50	15.50	76	1,225 [578]
	RCFL-A*4821 (-GGE-10?ZCM?)	39,500 [11.6]	27,150 [8.0]	12,350 [3.6]	12.50	15.10	76	1,200 [566]
	RCFL-A*4821 (-GLE-07?AMK?)	39,500 [11.6]	27,150 [8.0]	12,350 [3.6]	12.50	15.10	76	1,200 [566]
	RCFL-A*4821 (-GLE-10?BRM?)	40,500 [11.9]	29,150 [8.5]	11,350 [3.3]	12.50	15.50	76	1,400 [661]
	RCFL-A*4821 (UGLL-07?BRQ?)	40,000 [11.7]	27,800 [8.1]	12,200 [3.6]	13.10	15.50	76	1,225 [578]
	RCFL-A*4821 (-GLR-07?AMK?)	39,500 [11.6]	27,150 [8.0]	12,350 [3.6]	12.60	15.10	76	1,200 [566]
	RCFL-A*4821 (-GLR-07?BRQ?)	40,000 [11.7]	27,800 [8.1]	12,200 [3.6]	13.10	15.50	76	1,225 [578]
	RCFL-A*4821 (-GLR-10?BRM?)	40,000 [11.7]	27,550 [8.1]	12,450 [3.6]	13.05	15.50	76	1,200 [566]
	RCFL-A*4821 (RGLT-07?AME?)	40,000 [11.7]	27,900 [8.2]	12,100 [3.5]	12.50	15.10	76	1,250 [590]
	RCFL-A*4821 (RGLT-07?BRQ?)	40,000 [11.7]	27,800 [8.1]	12,200 [3.6]	13.00	15.50	76	1,250 [590]
	RCFL-A*4821 (RGLT-10?BRM?)	40,000 [11.7]	27,800 [8.1]	12,200 [3.6]	13.00	15.50	76	1,250 [590]
	RCFL-A*4821 (-GPE-05?BMK?)	39,500 [11.6]	27,200 [8.0]	12,300 [3.6]	12.00	14.50	76	1,200 [566]
	RCFL-A*4821 (-GPE-07?AMK?)	40,000 [11.7]	27,900 [8.2]	12,100 [3.5]	12.50	15.10	76	1,225 [578]
	RCFL-A*4821 (-GPE-07?BRQ?)	40,000 [11.7]	27,800 [8.1]	12,200 [3.6]	13.00	15.50	76	1,225 [578]
	RCFL-A*4821 (-GPE-10?BRM?)	40,000 [11.7]	27,800 [8.1]	12,200 [3.6]	13.00	15.50	76	1,225 [578]
	RCFL-A*4821 (-GPR-05?BMK?)	39,000 [11.4]	26,750 [7.8]	12,250 [3.6]	12.00	14.50	76	1,200 [566]
	RCFL-A*4821 (-GPR-07?AMK?)	39,500 [11.6]	27,150 [8.0]	12,350 [3.6]	12.55	15.00	76	1,200 [566]
	RCFL-A*4821 (-GPR-07?BRQ?)	40,000 [11.7]	27,550 [8.1]	12,450 [3.6]	13.05	15.50	76	1,200 [566]
	RCFL-A*4821 (-GPR-10?BRM?)	40,000 [11.7]	27,850 [8.2]	12,150 [3.6]	12.95	15.50	76	1,225 [578]
	RCFL-A*4821 (RGPT-05?BMK?)	39,500 [11.6]	27,450 [8.0]	12,050 [3.5]	12.00	14.50	76	1,225 [578]
	RCFL-A*4821 (RGPT-07?AME?)	39,500 [11.6]	27,450 [8.0]	12,050 [3.5]	12.00	14.50	76	1,250 [590]

① Highest sales volume tested combination required by D.O.E. test procedures.

[ ] Designates Metric Conversions

Performance Data @ AHRI Standard Conditions—Cooling: UAPM- JAZ (continued)

Model Numbers		80°F [26.5°C] DB/67°F [19.5°C] WB Indoor Air 95°F [35°C] DB Outdoor Air					Sound Rating dB	Indoor CFM [L/s]
Outdoor Unit UAPM-	Indoor Coil and/or Air Handler	Total Capacity BTU/H [kW]	Net Sensible BTU/H [kW]	Net Latent BTU/H [kW]	EER	SEER		
Rev. 6/30/10	RCFL-A*4821 (RGPT-07?BRQ?)	40,000 [11.7]	27,800 [8.1]	12,200 [3.6]	13.00	15.50	76	1,250 [590]
	RCFL-A*4821 (RGPT-10?BRM?)	40,000 [11.7]	27,800 [8.1]	12,200 [3.6]	13.00	15.50	76	1,225 [578]
	RCFL-A*4821 (-GTM-06?MAE?)	39,500 [11.6]	27,500 [8.1]	12,000 [3.5]	12.00	14.50	76	1,225 [578]
	RCFL-A*4821 (-GTM-07?RBG?)	39,500 [11.6]	26,700 [7.8]	12,800 [3.8]	12.50	15.50	76	1,125 [531]
	RCFL-A*4821 (-GTM-09?ZAJ?)	40,000 [11.7]	27,850 [8.2]	12,150 [3.6]	12.50	15.10	76	1,250 [590]
	ROCA-070E03 (RCFL-A*4821)	39,500 [11.6]	27,150 [8.0]	12,350 [3.6]	12.50	15.10	76	1,200 [566]
	ROCA-070E04 (RCFL-A*4821)	39,500 [11.6]	27,150 [8.0]	12,350 [3.6]	12.50	15.10	76	1,200 [566]
	ROLA-070E03 (RCFL-A*4821)	39,500 [11.6]	26,950 [7.9]	12,550 [3.7]	12.50	15.50	76	1,175 [554]
	ROLA-070E04 (RCFL-A*4821)	39,500 [11.6]	26,950 [7.9]	12,550 [3.7]	12.50	15.50	76	1,175 [554]
	RCFL-A*4821+RXMD-C04	39,500 [11.6]	27,500 [8.1]	12,000 [3.5]	12.05	14.50	76	1,250 [590]
	RCFL-A*4824 (-GFD-09?ZCM?)	39,500 [11.6]	26,850 [7.9]	12,650 [3.7]	12.80	15.10	76	1,150 [543]
	RCFL-A*4824 (-GFD-10?ZCM?)	39,500 [11.6]	27,000 [7.9]	12,500 [3.7]	12.70	15.10	76	1,175 [554]
	RCFL-A*4824 (-GFD-12?RCM?)	40,000 [11.7]	27,850 [8.2]	12,150 [3.6]	12.95	15.50	76	1,225 [578]
	RCFL-A*4824 (-GFE-09?ZCM?)	39,500 [11.6]	27,150 [8.0]	12,350 [3.6]	12.50	15.10	76	1,200 [566]
	RCFL-A*4824 (-GFE-10?ZCM?)	40,000 [11.7]	27,900 [8.2]	12,100 [3.5]	12.50	15.10	76	1,225 [578]
	RCFL-A*4824 (-GFE-12?RCM?)	40,000 [11.7]	27,850 [8.2]	12,150 [3.6]	12.50	15.50	76	1,225 [578]
	RCFL-A*4824 (-GGD-09?ZCM?)	39,500 [11.6]	27,000 [7.9]	12,500 [3.7]	12.85	15.10	76	1,175 [554]
	RCFL-A*4824 (-GGD-10?ZCM?)	39,500 [11.6]	26,950 [7.9]	12,550 [3.7]	12.85	15.50	76	1,175 [554]
	RCFL-A*4824 (-GGD-12?RCM?)	40,000 [11.7]	27,800 [8.1]	12,200 [3.6]	13.05	15.50	76	1,225 [578]
	RCFL-A*4824 (-GGE-09?ZCM?)	40,000 [11.7]	27,850 [8.2]	12,150 [3.6]	12.50	15.50	76	1,225 [578]
	RCFL-A*4824 (-GGE-10?ZCM?)	39,500 [11.6]	27,150 [8.0]	12,350 [3.6]	12.50	15.10	76	1,200 [566]
	RCFL-A*4824 (-GGE-12?RCM?)	40,000 [11.7]	27,550 [8.1]	12,450 [3.6]	12.50	15.50	76	1,200 [566]
	RCFL-A*4824 (-GLE-10?BRM?)	40,000 [11.7]	27,550 [8.1]	12,450 [3.6]	13.00	15.50	76	1,200 [566]
	RCFL-A*4824 (-GLE-12?ARM?)	40,000 [11.7]	27,800 [8.1]	12,200 [3.6]	13.00	15.50	76	1,225 [578]
	RCFL-A*4824 (UGLL-07?BRQ?)	40,000 [11.7]	27,800 [8.1]	12,200 [3.6]	13.10	15.50	76	1,225 [578]
	RCFL-A*4824 (UGLL-12?ARM?)	40,000 [11.7]	27,800 [8.1]	12,200 [3.6]	13.20	15.50	76	1,225 [578]
042JAZ	RCFL-A*4824 (-GLR-07?BRQ?)	40,000 [11.7]	27,800 [8.1]	12,200 [3.6]	13.10	15.50	76	1,225 [578]
	RCFL-A*4824 (-GLR-10?BRM?)	40,000 [11.7]	27,550 [8.1]	12,450 [3.6]	13.05	15.50	76	1,200 [566]
	RCFL-A*4824 (-GLR-12?ARM?)	40,000 [11.7]	27,800 [8.1]	12,200 [3.6]	13.20	15.50	76	1,225 [578]
	RCFL-A*4824 (RGLT-07?BRQ?)	40,000 [11.7]	27,800 [8.1]	12,200 [3.6]	13.00	15.50	76	1,250 [590]
	RCFL-A*4824 (RGLT-10?BRM?)	40,000 [11.7]	27,800 [8.1]	12,200 [3.6]	13.00	15.50	76	1,250 [590]
	RCFL-A*4824 (RGLT-12?ARM?)	39,500 [11.6]	26,750 [7.8]	12,750 [3.7]	13.00	16.00	76	1,150 [543]
	RCFL-A*4824 (-GPE-07?BRQ?)	40,000 [11.7]	27,800 [8.1]	12,200 [3.6]	13.00	15.50	76	1,225 [578]
	RCFL-A*4824 (-GPE-10?BRM?)	40,000 [11.7]	27,800 [8.1]	12,200 [3.6]	13.00	15.50	76	1,225 [578]
	RCFL-A*4824 (-GPE-12?ARM?)	41,000 [12.0]	29,800 [8.7]	11,200 [3.3]	12.50	15.50	76	1,425 [672]
	RCFL-A*4824 (-GPR-07?BRQ?)	40,000 [11.7]	27,550 [8.1]	12,450 [3.6]	13.05	15.50	76	1,200 [566]
	RCFL-A*4824 (-GPR-10?BRM?)	40,000 [11.7]	27,850 [8.2]	12,150 [3.6]	12.95	15.50	76	1,225 [578]
	RCFL-A*4824 (-GPR-12?ARM?)	40,000 [11.7]	27,800 [8.1]	12,200 [3.6]	13.05	15.50	76	1,250 [590]
	RCFL-A*4824 (RGPT-07?BRQ?)	40,000 [11.7]	27,800 [8.1]	12,200 [3.6]	13.00	15.50	76	1,225 [578]
	RCFL-A*4824 (RGPT-10?BRM?)	40,000 [11.7]	27,800 [8.1]	12,200 [3.6]	13.00	15.50	76	1,225 [578]
	RCFL-A*4824 (RGPT-12?ARM?)	40,000 [11.7]	27,400 [8.0]	12,600 [3.7]	13.00	16.00	76	1,175 [554]
	RCFL-A*4824 (-GRM-09?ZAJ?)	40,000 [11.7]	27,900 [8.2]	12,100 [3.5]	12.55	15.00	76	1,225 [578]
	RCFL-A*4824 (-GRM-10?ZAJ?)	39,500 [11.6]	26,900 [7.9]	12,600 [3.7]	12.55	15.10	76	1,150 [543]
	RCFL-A*4824 (-GRM-12?RAJ?)	40,000 [11.7]	27,850 [8.2]	12,150 [3.6]	12.80	15.10	76	1,225 [578]
	ROCA-070E03 (RCFL-A*4824)	39,500 [11.6]	27,150 [8.0]	12,350 [3.6]	12.50	15.10	76	1,200 [566]
	ROCA-070E04 (RCFL-A*4824)	39,500 [11.6]	27,150 [8.0]	12,350 [3.6]	12.50	15.10	76	1,200 [566]
	ROLA-070E03 (RCFL-A*4824)	39,500 [11.6]	26,950 [7.9]	12,550 [3.7]	12.50	15.50	76	1,175 [554]
	ROLA-070E04 (RCFL-A*4824)	39,500 [11.6]	26,950 [7.9]	12,550 [3.7]	12.50	15.50	76	1,175 [554]
	ROLA-115E05 (RCFL-A*4824)	40,000 [11.7]	27,550 [8.1]	12,450 [3.6]	13.00	15.50	76	1,200 [566]
	RCFL-H*3821	40,000 [11.7]	27,600 [8.1]	12,400 [3.6]	12.00	14.50	76	1,220 [576]
	RCFL-H*3821 (-GFD-09?ZCM?)	40,500 [11.9]	27,500 [8.1]	13,000 [3.8]	13.00	15.50	76	1,150 [543]
	RCFL-H*3821 (-GFD-10?ZCM?)	40,500 [11.9]	27,650 [8.1]	12,850 [3.8]	12.50	15.10	76	1,175 [554]
	RCFL-H*3821 (-GFE-09?ZCM?)	40,500 [11.9]	27,850 [8.2]	12,650 [3.7]	12.50	15.10	76	1,200 [566]

① Highest sales volume tested combination required by D.O.E. test procedures.

[ ] Designates Metric Conversions

Performance Data @ AHRI Standard Conditions—Cooling: UAPM- JAZ (continued)

Model Numbers		80°F [26.5°C] DB/67°F [19.5°C] WB Indoor Air 95°F [35°C] DB Outdoor Air					Sound Rating dB	Indoor CFM [L/s]
Outdoor Unit UAPM-	Indoor Coil and/or Air Handler	Total Capacity BTU/H [kW]	Net Sensible BTU/H [kW]	Net Latent BTU/H [kW]	EER	SEER		
Rev. 6/30/10	RCFL-H*3821 (-GFE-10?ZCM?)	40,500 [11.9]	27,850 [8.2]	12,650 [3.7]	12.50	15.10	76	1,225 [578]
	RCFL-H*3821 (-GGD-06?MCK?)	40,000 [11.7]	27,450 [8.0]	12,550 [3.7]	12.00	14.50	76	1,225 [578]
	RCFL-H*3821 (-GGD-09?ZCM?)	40,500 [11.9]	27,600 [8.1]	12,900 [3.8]	13.00	15.10	76	1,175 [554]
	RCFL-H*3821 (-GGD-10?ZCM?)	40,500 [11.9]	27,600 [8.1]	12,900 [3.8]	13.00	15.50	76	1,175 [554]
	RCFL-H*3821 (-GGE-06?MCK?)	40,500 [11.9]	27,900 [8.2]	12,600 [3.7]	12.50	14.50	76	1,200 [566]
	RCFL-H*3821 (-GGE-07?MCK?)	40,500 [11.9]	27,900 [8.2]	12,600 [3.7]	12.50	14.50	76	1,200 [566]
	RCFL-H*3821 (-GGE-09?ZCM?)	40,500 [11.9]	27,800 [8.1]	12,700 [3.7]	13.00	15.10	76	1,225 [578]
	RCFL-H*3821 (-GGE-10?ZCM?)	40,500 [11.9]	27,850 [8.2]	12,650 [3.7]	12.50	15.10	76	1,200 [566]
	RCFL-H*3821 (-GJD-06?MCK?)	40,000 [11.7]	27,450 [8.0]	12,550 [3.7]	12.00	14.50	76	1,225 [578]
	RCFL-H*3821 (-GJD-09?ZCM?)	40,500 [11.9]	27,600 [8.1]	12,900 [3.8]	13.00	15.50	76	1,175 [554]
	RCFL-H*3821 (-GJD-10?ZCM?)	40,500 [11.9]	27,600 [8.1]	12,900 [3.8]	13.00	15.50	76	1,175 [554]
	RCFL-H*3821 (-GJF-06?MCK?)	40,500 [11.9]	27,900 [8.2]	12,600 [3.7]	12.50	15.00	76	1,200 [566]
	RCFL-H*3821 (-GJF-07?MCK?)	40,500 [11.9]	27,900 [8.2]	12,600 [3.7]	12.50	14.50	76	1,200 [566]
	RCFL-H*3821 (-GJF-09?ZCM?)	40,500 [11.9]	27,800 [8.1]	12,700 [3.7]	13.00	15.10	76	1,225 [578]
	RCFL-H*3821 (-GJF-10?ZCM?)	40,500 [11.9]	27,850 [8.2]	12,650 [3.7]	12.50	15.10	76	1,200 [566]
	RCFL-H*3821 (-GLE-07?AMK?)	40,500 [11.9]	27,850 [8.2]	12,650 [3.7]	12.50	15.10	76	1,200 [566]
	RCFL-H*3821 (RGLE-07?BRQ?)	40,500 [11.9]	27,800 [8.1]	12,700 [3.7]	13.00	15.50	76	1,225 [578]
	RCFL-H*3821 (-GLE-10?BRM?)	41,000 [12.0]	28,250 [8.3]	12,750 [3.7]	13.00	15.50	76	1,200 [566]
	RCFL-H*3821 (-GLR-07?AMK?)	40,500 [11.9]	27,850 [8.2]	12,650 [3.7]	12.50	15.10	76	1,200 [566]
	RCFL-H*3821 (-GLR-07?BRQ?)	41,000 [12.0]	28,300 [8.3]	12,700 [3.7]	13.00	15.50	76	1,225 [578]
	RCFL-H*3821 (-GLR-10?BRM?)	41,000 [12.0]	28,250 [8.3]	12,750 [3.7]	13.00	15.50	76	1,200 [566]
	RCFL-H*3821 (RGLT-07?AME?)	40,000 [11.7]	27,900 [8.2]	12,100 [3.5]	12.50	15.10	76	1,250 [590]
	RCFL-H*3821 (RGLT-07?BRQ?)	40,000 [11.7]	27,800 [8.1]	12,200 [3.6]	13.00	15.50	76	1,250 [590]
	RCFL-H*3821 (RGLT-10?BRM?)	40,000 [11.7]	27,800 [8.1]	12,200 [3.6]	13.00	15.50	76	1,250 [590]
	RCFL-H*3821 (-GPE-05?BMK?)	40,500 [11.9]	27,900 [8.2]	12,600 [3.7]	12.50	14.50	76	1,200 [566]
	RCFL-H*3821 (-GPE-07?AMK?)	40,500 [11.9]	27,900 [8.2]	12,600 [3.7]	12.50	15.10	76	1,225 [578]
042JAZ	RCFL-H*3821 (-GPE-07?BRQ?)	41,000 [12.0]	28,300 [8.3]	12,700 [3.7]	13.00	15.50	76	1,225 [578]
	RCFL-H*3821 (-GPE-10?BRM?)	41,000 [12.0]	28,250 [8.3]	12,750 [3.7]	13.00	15.50	76	1,225 [578]
	RCFL-H*3821 (-GPL-07?BRK?)	40,500 [11.9]	27,850 [8.2]	12,650 [3.7]	12.50	15.10	76	1,200 [566]
	RCFL-H*3821 (-GPR-07?AMK?)	40,500 [11.9]	27,900 [8.2]	12,600 [3.7]	12.50	15.10	76	1,200 [566]
	RCFL-H*3821 (-GPR-07?BRQ?)	41,000 [12.0]	28,250 [8.3]	12,750 [3.7]	13.00	15.50	76	1,200 [566]
	RCFL-H*3821 (-GPR-10?BRM?)	40,500 [11.9]	27,800 [8.1]	12,700 [3.7]	13.00	15.50	76	1,200 [566]
	RCFL-H*3821 (RGPT-05?BMK?)	39,500 [11.6]	27,450 [8.0]	12,050 [3.5]	12.00	14.50	76	1,225 [578]
	RCFL-H*3821 (RGPT-07?AME?)	39,500 [11.6]	27,450 [8.0]	12,050 [3.5]	12.00	14.50	76	1,250 [590]
	RCFL-H*3821 (RGPT-07?BRQ?)	40,000 [11.7]	27,800 [8.1]	12,200 [3.6]	13.00	15.50	76	1,250 [590]
	RCFL-H*3821 (RGPT-10?BRM?)	40,000 [11.7]	27,800 [8.1]	12,200 [3.6]	13.00	15.50	76	1,225 [578]
	RCFL-H*3821 (-GRM-09?ZAJ?)	40,500 [11.9]	27,900 [8.2]	12,600 [3.7]	12.50	15.00	76	1,225 [578]
	RCFL-H*3821 (-GRM-10?ZAJ?)	40,000 [11.7]	27,050 [7.9]	12,950 [3.8]	12.50	15.00	76	1,150 [543]
	RCFL-H*3821 (-GTM-07?RBG?)	41,000 [12.0]	28,650 [8.4]	12,350 [3.6]	12.50	15.10	76	1,275 [602]
	RCFL-H*3821 (-GTM-09?ZAJ?)	41,000 [12.0]	28,500 [8.4]	12,500 [3.7]	13.00	15.50	76	1,250 [590]
	ROCA-070E03 (RCFL-H*3821)	39,500 [11.6]	27,150 [8.0]	12,350 [3.6]	12.50	15.10	76	1,200 [566]
	ROCA-070E04 (RCFL-H*3821)	39,500 [11.6]	27,150 [8.0]	12,350 [3.6]	12.50	15.10	76	1,200 [566]
	ROLA-070E03 (RCFL-H*3821)	39,500 [11.6]	26,950 [7.9]	12,550 [3.7]	12.50	15.50	76	1,175 [554]
	ROLA-070E04 (RCFL-H*3821)	39,500 [11.6]	26,950 [7.9]	12,550 [3.7]	12.50	15.50	76	1,175 [554]
	ROLA-115E05 (RCFL-H*3821)	40,000 [11.7]	27,550 [8.1]	12,450 [3.6]	13.00	15.50	76	1,200 [566]
	RCFL-H*3824 (RGLT-07?BRQ?)	40,000 [11.7]	27,800 [8.1]	12,200 [3.6]	13.00	15.50	76	1,250 [590]
	RCFL-H*3824 (RGLT-10?BRM?)	40,000 [11.7]	27,800 [8.1]	12,200 [3.6]	13.00	15.50	76	1,250 [590]
	RCFL-H*3824 (RGLT-12?ARM?)	39,500 [11.6]	26,750 [7.8]	12,750 [3.7]	13.00	16.00	76	1,150 [543]
	RCFL-H*3824 (RGPT-07?BRQ?)	40,500 [11.9]	28,700 [8.4]	11,800 [3.5]	13.00	15.50	76	1,325 [625]
	RCFL-H*3824 (RGPT-10?BRM?)	40,000 [11.7]	27,800 [8.1]	12,200 [3.6]	13.00	15.50	76	1,225 [578]
	RCFL-H*3824 (RGPT-12?ARM?)	40,000 [11.7]	27,400 [8.0]	12,600 [3.7]	13.00	16.00	76	1,175 [554]
	ROCA-070E03 (RCFL-H*3824)	39,500 [11.6]	27,150 [8.0]	12,350 [3.6]	12.50	15.10	76	1,200 [566]
	ROCA-070E04 (RCFL-H*3824)	39,500 [11.6]	27,150 [8.0]	12,350 [3.6]	12.50	15.10	76	1,200 [566]

① Highest sales volume tested combination required by D.O.E. test procedures.

[ ] Designates Metric Conversions

Performance Data @ AHRI Standard Conditions—Cooling: UAPM- JAZ (continued)

Model Numbers		80°F [26.5°C] DB/67°F [19.5°C] WB Indoor Air 95°F [35°C] DB Outdoor Air					Sound Rating dB	Indoor CFM [L/s]
Outdoor Unit UAPM-	Indoor Coil and/or Air Handler	Total Capacity BTU/H [kW]	Net Sensible BTU/H [kW]	Net Latent BTU/H [kW]	EER	SEER		
Rev. 6/30/10	ROLA-070E03 (RCFL-H*3824)	39,500 [11.6]	26,950 [7.9]	12,550 [3.7]	12.90	15.50	76	1,175 [554]
	ROLA-070E04 (RCFL-H*3824)	39,500 [11.6]	26,950 [7.9]	12,550 [3.7]	12.90	15.50	76	1,175 [554]
	ROLA-115E05 (RCFL-H*3824)	40,000 [11.7]	27,550 [8.1]	12,450 [3.6]	13.00	15.50	76	1,200 [566]
	RCFL-H*4821 (-GFD-09?ZCM?)	39,500 [11.6]	26,850 [7.9]	12,650 [3.7]	12.85	15.10	76	1,150 [543]
	RCFL-H*4821 (-GFD-10?ZCM?)	39,500 [11.6]	27,000 [7.9]	12,500 [3.7]	12.70	15.10	76	1,175 [554]
	RCFL-H*4821 (-GFE-09?ZCM?)	39,500 [11.6]	27,150 [8.0]	12,350 [3.6]	12.50	15.10	76	1,200 [566]
	RCFL-H*4821 (-GFE-10?ZCM?)	40,000 [11.7]	27,900 [8.2]	12,100 [3.5]	12.50	15.10	76	1,225 [578]
	RCFL-H*4821 (-GGD-06?MCK?)	39,500 [11.6]	27,500 [8.1]	12,000 [3.5]	12.00	14.50	76	1,225 [578]
	RCFL-H*4821 (-GGD-07?MCK?)	39,500 [11.6]	27,500 [8.1]	12,000 [3.5]	12.00	14.50	76	1,225 [578]
	RCFL-H*4821 (-GGD-09?ZCM?)	39,500 [11.6]	27,000 [7.9]	12,500 [3.7]	12.85	15.10	76	1,175 [554]
	RCFL-H*4821 (-GGD-10?ZCM?)	39,500 [11.6]	26,950 [7.9]	12,550 [3.7]	12.85	15.50	76	1,175 [554]
	RCFL-H*4821 (-GGE-06?MCK?)	39,500 [11.6]	27,200 [8.0]	12,300 [3.6]	12.00	14.50	76	1,200 [566]
	RCFL-H*4821 (-GGE-07?MCK?)	39,500 [11.6]	27,200 [8.0]	12,300 [3.6]	12.00	14.50	76	1,200 [566]
	RCFL-H*4821 (-GGE-09?ZCM?)	40,000 [11.7]	27,850 [8.2]	12,150 [3.6]	12.50	15.50	76	1,225 [578]
	RCFL-H*4821 (-GGE-10?ZCM?)	39,500 [11.6]	27,150 [8.0]	12,350 [3.6]	12.50	15.10	76	1,200 [566]
	RCFL-H*4821 (-GJD-06?MCK?)	39,500 [11.6]	27,500 [8.1]	12,000 [3.5]	12.00	14.50	76	1,225 [578]
	RCFL-H*4821 (-GJD-07?MCK?)	39,500 [11.6]	27,500 [8.1]	12,000 [3.5]	12.00	14.50	76	1,225 [578]
	RCFL-H*4821 (-GJD-09?ZCM?)	39,500 [11.6]	26,950 [7.9]	12,550 [3.7]	12.85	15.50	76	1,175 [554]
	RCFL-H*4821 (-GJD-10?ZCM?)	39,500 [11.6]	26,950 [7.9]	12,550 [3.7]	12.90	15.50	76	1,175 [554]
	RCFL-H*4821 (-GJF-06?MCK?)	39,500 [11.6]	27,200 [8.0]	12,300 [3.6]	12.00	14.50	76	1,200 [566]
	RCFL-H*4821 (-GJF-07?MCK?)	39,500 [11.6]	27,200 [8.0]	12,300 [3.6]	12.00	14.50	76	1,200 [566]
	RCFL-H*4821 (-GJF-09?ZCM?)	40,000 [11.7]	27,850 [8.2]	12,150 [3.6]	12.50	15.50	76	1,225 [578]
	RCFL-H*4821 (-GJF-10?ZCM?)	39,500 [11.6]	27,100 [7.9]	12,400 [3.6]	12.50	15.10	76	1,200 [566]
	RCFL-H*4821 (-GLE-07?AMK?)	39,500 [11.6]	27,150 [8.0]	12,350 [3.6]	12.50	15.10	76	1,200 [566]
	RCFL-H*4821 (-GLE-10?BRM?)	40,500 [11.9]	29,150 [8.5]	11,350 [3.3]	12.50	15.50	76	1,400 [661]
	RCFL-H*4821 (UGLL-07?BRQ?)	40,000 [11.7]	27,800 [8.1]	12,200 [3.6]	13.10	15.50	76	1,225 [578]
042JAZ	RCFL-H*4821 (-GLR-07?AMK?)	39,500 [11.6]	27,150 [8.0]	12,350 [3.6]	12.60	15.10	76	1,200 [566]
	RCFL-H*4821 (-GLR-07?BRQ?)	40,000 [11.7]	27,800 [8.1]	12,200 [3.6]	13.10	15.50	76	1,225 [578]
	RCFL-H*4821 (-GLR-10?BRM?)	40,000 [11.7]	27,550 [8.1]	12,450 [3.6]	13.05	15.50	76	1,200 [566]
	RCFL-H*4821 (RGLT-07?AME?)	40,000 [11.7]	27,900 [8.2]	12,100 [3.5]	12.50	15.10	76	1,250 [590]
	RCFL-H*4821 (RGLT-07?BRQ?)	40,000 [11.7]	27,800 [8.1]	12,200 [3.6]	13.00	15.50	76	1,250 [590]
	RCFL-H*4821 (RGLT-10?BRM?)	40,000 [11.7]	27,800 [8.1]	12,200 [3.6]	13.00	15.50	76	1,250 [590]
	RCFL-H*4821 (-GPE-05?BMK?)	39,500 [11.6]	27,200 [8.0]	12,300 [3.6]	12.00	14.50	76	1,200 [566]
	RCFL-H*4821 (-GPE-07?AMK?)	40,000 [11.7]	27,900 [8.2]	12,100 [3.5]	12.50	15.10	76	1,225 [578]
	RCFL-H*4821 (-GPE-07?BRQ?)	40,000 [11.7]	27,800 [8.1]	12,200 [3.6]	13.00	15.50	76	1,225 [578]
	RCFL-H*4821 (-GPE-10?BRM?)	40,000 [11.7]	27,800 [8.1]	12,200 [3.6]	13.00	15.50	76	1,225 [578]
	RCFL-H*4821 (-GPR-05?BMK?)	39,000 [11.4]	26,750 [7.8]	12,250 [3.6]	12.00	14.50	76	1,200 [566]
	RCFL-H*4821 (-GPR-07?AMK?)	39,500 [11.6]	27,150 [8.0]	12,350 [3.6]	12.55	15.00	76	1,200 [566]
	RCFL-H*4821 (-GPR-07?BRQ?)	40,000 [11.7]	27,550 [8.1]	12,450 [3.6]	13.05	15.50	76	1,200 [566]
	RCFL-H*4821 (-GPR-10?BRM?)	40,000 [11.7]	27,850 [8.2]	12,150 [3.6]	12.95	15.50	76	1,225 [578]
	RCFL-H*4821 (RGPT-05?BMK?)	39,500 [11.6]	27,450 [8.0]	12,050 [3.5]	12.00	14.50	76	1,225 [578]
	RCFL-H*4821 (RGPT-07?AME?)	39,500 [11.6]	27,450 [8.0]	12,050 [3.5]	12.00	14.50	76	1,250 [590]
	RCFL-H*4821 (RGPT-07?BRQ?)	40,000 [11.7]	27,800 [8.1]	12,200 [3.6]	13.00	15.50	76	1,250 [590]
	RCFL-H*4821 (RGPT-10?BRM?)	40,000 [11.7]	27,800 [8.1]	12,200 [3.6]	13.00	15.50	76	1,225 [578]
	RCFL-H*4821 (-GRM-09?ZAJ?)	40,000 [11.7]	27,900 [8.2]	12,100 [3.5]	12.60	15.10	76	1,225 [578]
	RCFL-H*4821 (-GRM-10?ZAJ?)	39,500 [11.6]	26,900 [7.9]	12,600 [3.7]	12.60	15.10	76	1,150 [543]
	RCFL-H*4821 (-GTM-06?MAE?)	39,500 [11.6]	27,500 [8.1]	12,000 [3.5]	12.00	14.50	76	1,225 [578]
	RCFL-H*4821 (-GTM-07?RBG?)	39,500 [11.6]	26,700 [7.8]	12,800 [3.8]	12.50	15.50	76	1,125 [531]
	RCFL-H*4821 (-GTM-09?ZAJ?)	40,000 [11.7]	27,850 [8.2]	12,150 [3.6]	12.50	15.10	76	1,250 [590]
	ROCA-070E03 (RCFL-H*4821)	39,500 [11.6]	27,150 [8.0]	12,350 [3.6]	12.50	15.10	76	1,200 [566]
	ROCA-070E04 (RCFL-H*4821)	39,500 [11.6]	27,150 [8.0]	12,350 [3.6]	12.50	15.10	76	1,200 [566]
	ROLA-070E03 (RCFL-H*4821)	39,500 [11.6]	26,950 [7.9]	12,550 [3.7]	12.50	15.50	76	1,175 [554]
	ROLA-070E04 (RCFL-H*4821)	39,500 [11.6]	26,950 [7.9]	12,550 [3.7]	12.50	15.50	76	1,175 [554]

① Highest sales volume tested combination required by D.O.E. test procedures.

[ ] Designates Metric Conversions

Performance Data @ AHRI Standard Conditions—Cooling: UAPM- JAZ (continued)

Model Numbers		80°F [26.5°C] DB/67°F [19.5°C] WB Indoor Air 95°F [35°C] DB Outdoor Air					Sound Rating dB	Indoor CFM [L/s]
Outdoor Unit UAPM-	Indoor Coil and/or Air Handler	Total Capacity BTU/H [kW]	Net Sensible BTU/H [kW]	Net Latent BTU/H [kW]	EER	SEER		
Rev. 6/30/10	ROLA-115E05 (RCFL-H*4821)	40,000 [11.7]	27,550 [8.1]	12,450 [3.6]	13.00	15.50	76	1,200 [566]
	RCFL-H*4824 (-GFD-09?ZCM?)	39,500 [11.6]	26,850 [7.9]	12,650 [3.7]	12.80	15.10	76	1,150 [543]
	RCFL-H*4824 (-GFD-10?ZCM?)	39,500 [11.6]	27,000 [7.9]	12,500 [3.7]	12.70	15.10	76	1,175 [554]
	RCFL-H*4824 (-GFD-12?RCM?)	40,000 [11.7]	27,850 [8.2]	12,150 [3.6]	12.95	15.50	76	1,225 [578]
	RCFL-H*4824 (-GFE-09?ZCM?)	39,500 [11.6]	27,150 [8.0]	12,350 [3.6]	12.50	15.10	76	1,200 [566]
	RCFL-H*4824 (-GFE-10?ZCM?)	40,000 [11.7]	27,900 [8.2]	12,100 [3.5]	12.50	15.10	76	1,225 [578]
	RCFL-H*4824 (-GFE-12?RCM?)	40,000 [11.7]	27,850 [8.2]	12,150 [3.6]	12.50	15.50	76	1,225 [578]
	RCFL-H*4824 (-GGD-09?ZCM?)	39,500 [11.6]	27,000 [7.9]	12,500 [3.7]	12.85	15.10	76	1,175 [554]
	RCFL-H*4824 (-GGD-10?ZCM?)	39,500 [11.6]	26,950 [7.9]	12,550 [3.7]	12.85	15.50	76	1,175 [554]
	RCFL-H*4824 (-GGD-12?RCM?)	40,000 [11.7]	27,800 [8.1]	12,200 [3.6]	13.05	15.50	76	1,225 [578]
	RCFL-H*4824 (-GGE-09?ZCM?)	40,000 [11.7]	27,850 [8.2]	12,150 [3.6]	12.50	15.50	76	1,225 [578]
	RCFL-H*4824 (-GGE-10?ZCM?)	39,500 [11.6]	27,150 [8.0]	12,350 [3.6]	12.50	15.10	76	1,200 [566]
	RCFL-H*4824 (-GGE-12?RCM?)	40,500 [11.9]	29,050 [8.5]	11,450 [3.4]	12.50	15.00	76	1,375 [649]
	RCFL-H*4824 (-GJD-09?ZCM?)	39,500 [11.6]	26,950 [7.9]	12,550 [3.7]	12.85	15.50	76	1,175 [554]
	RCFL-H*4824 (-GJD-10?ZCM?)	39,500 [11.6]	26,950 [7.9]	12,550 [3.7]	12.90	15.50	76	1,175 [554]
	RCFL-H*4824 (-GJD-12?RCM?)	40,000 [11.7]	27,800 [8.1]	12,200 [3.6]	13.10	15.50	76	1,225 [578]
	RCFL-H*4824 (-GJF-09?ZCM?)	40,000 [11.7]	27,850 [8.2]	12,150 [3.6]	12.50	15.50	76	1,225 [578]
	RCFL-H*4824 (-GJF-10?ZCM?)	40,000 [11.7]	27,850 [8.2]	12,150 [3.6]	12.50	15.50	76	1,225 [578]
	RCFL-H*4824 (-GJF-12?RCM?)	40,000 [11.7]	27,550 [8.1]	12,450 [3.6]	13.00	15.50	76	1,200 [566]
	RCFL-H*4824 (-GLE-10?BRM?)	40,500 [11.9]	29,150 [8.5]	11,350 [3.3]	12.50	15.50	76	1,400 [661]
	RCFL-H*4824 (-GLE-12?ARM?)	40,000 [11.7]	27,800 [8.1]	12,200 [3.6]	13.00	15.50	76	1,225 [578]
	RCFL-H*4824 (UGLL-07?BRQ?)	40,000 [11.7]	27,800 [8.1]	12,200 [3.6]	13.10	15.50	76	1,225 [578]
	RCFL-H*4824 (UGLL-12?ARM?)	40,000 [11.7]	27,800 [8.1]	12,200 [3.6]	13.20	15.50	76	1,225 [578]
	RCFL-H*4824 (-GLR-07?BRQ?)	40,000 [11.7]	27,800 [8.1]	12,200 [3.6]	13.10	15.50	76	1,225 [578]
	RCFL-H*4824 (-GLR-10?BRM?)	40,000 [11.7]	27,550 [8.1]	12,450 [3.6]	13.05	15.50	76	1,200 [566]
	RCFL-H*4824 (-GLR-12?ARM?)	40,000 [11.7]	27,800 [8.1]	12,200 [3.6]	13.20	15.50	76	1,225 [578]
042JAZ	RCFL-H*4824 (RGLT-07?BRQ?)	40,000 [11.7]	27,800 [8.1]	12,200 [3.6]	13.00	15.50	76	1,250 [590]
	RCFL-H*4824 (RGLT-10?BRM?)	40,000 [11.7]	27,800 [8.1]	12,200 [3.6]	13.00	15.50	76	1,250 [590]
	RCFL-H*4824 (RGLT-12?ARM?)	39,500 [11.6]	26,750 [7.8]	12,750 [3.7]	13.00	16.00	76	1,150 [543]
	RCFL-H*4824 (-GPE-07?BRQ?)	40,000 [11.7]	27,800 [8.1]	12,200 [3.6]	13.00	15.50	76	1,225 [578]
	RCFL-H*4824 (-GPE-10?BRM?)	40,000 [11.7]	27,800 [8.1]	12,200 [3.6]	13.00	15.50	76	1,225 [578]
	RCFL-H*4824 (-GPE-12?ARM?)	41,000 [12.0]	29,800 [8.7]	11,200 [3.3]	12.50	15.50	76	1,425 [672]
	RCFL-H*4824 (-GPR-07?BRQ?)	40,000 [11.7]	27,550 [8.1]	12,450 [3.6]	13.05	15.50	76	1,200 [566]
	RCFL-H*4824 (-GPR-10?BRM?)	40,000 [11.7]	27,850 [8.2]	12,150 [3.6]	12.95	15.50	76	1,225 [578]
	RCFL-H*4824 (-GPR-12?ARM?)	40,000 [11.7]	27,800 [8.1]	12,200 [3.6]	13.05	15.50	76	1,250 [590]
	RCFL-H*4824 (RGPT-07?BRQ?)	40,000 [11.7]	27,800 [8.1]	12,200 [3.6]	13.00	15.50	76	1,225 [578]
	RCFL-H*4824 (RGPT-10?BRM?)	40,000 [11.7]	27,800 [8.1]	12,200 [3.6]	13.00	15.50	76	1,225 [578]
	RCFL-H*4824 (RGPT-12?ARM?)	40,000 [11.7]	27,400 [8.0]	12,600 [3.7]	13.00	16.00	76	1,175 [554]
	RCFL-H*4824 (-GRM-09?ZAJ?)	40,000 [11.7]	27,900 [8.2]	12,100 [3.5]	12.55	15.00	76	1,225 [578]
	RCFL-H*4824 (-GRM-10?ZAJ?)	39,500 [11.6]	26,900 [7.9]	12,600 [3.7]	12.55	15.10	76	1,150 [543]
	RCFL-H*4824 (-GRM-12?RAJ?)	40,000 [11.7]	27,850 [8.2]	12,150 [3.6]	12.80	15.10	76	1,225 [578]
	RCFL-H*4824 (-GTM-07?RBG?)	39,500 [11.6]	26,700 [7.8]	12,800 [3.8]	12.50	15.50	76	1,125 [531]
	RCFL-H*4824 (-GTM-09?ZAJ?)	40,000 [11.7]	27,850 [8.2]	12,150 [3.6]	12.50	15.10	76	1,250 [590]
	RCFL-H*4824 (-GTM-10?RBJ?)	39,500 [11.6]	26,700 [7.8]	12,800 [3.8]	13.00	15.50	76	1,125 [531]
	ROCA-070E03 (RCFL-H*4824)	39,500 [11.6]	27,150 [8.0]	12,350 [3.6]	12.50	15.10	76	1,200 [566]
	ROCA-070E04 (RCFL-H*4824)	39,500 [11.6]	27,150 [8.0]	12,350 [3.6]	12.50	15.10	76	1,200 [566]
	ROLA-070E03 (RCFL-H*4824)	39,500 [11.6]	26,950 [7.9]	12,550 [3.7]	12.50	15.50	76	1,175 [554]
	ROLA-070E04 (RCFL-H*4824)	39,500 [11.6]	26,950 [7.9]	12,550 [3.7]	12.50	15.50	76	1,175 [554]
	ROLA-115E05 (RCFL-H*4824)	40,000 [11.7]	27,550 [8.1]	12,450 [3.6]	13.00	15.50	76	1,200 [566]
	RCFL-H*4824+RXMD-C04	39,500 [11.6]	27,500 [8.1]	12,000 [3.5]	12.05	14.50	76	1,250 [590]
	RCFN-H*4824	42,000 [12.3]	29,800 [8.7]	12,200 [3.6]	12.50	15.00	76	1,200 [566]
	RCFN-H*4824 (-GFD-09?ZCM?)	43,000 [12.6]	31,300 [9.2]	11,700 [3.4]	13.00	15.00	76	1,325 [625]
	RCFN-H*4824 (-GFD-10?ZCM?)	43,000 [12.6]	31,350 [9.2]	11,650 [3.4]	13.00	15.00	76	1,325 [625]

① Highest sales volume tested combination required by D.O.E. test procedures.

[ ] Designates Metric Conversions

Performance Data @ AHRI Standard Conditions—Cooling: UAPM- JAZ (continued)

Model Numbers		80°F [26.5°C] DB/67°F [19.5°C] WB Indoor Air 95°F [35°C] DB Outdoor Air					Sound Rating dB	Indoor CFM [L/s]
Outdoor Unit UAPM-	Indoor Coil and/or Air Handler	Total Capacity BTU/H [kW]	Net Sensible BTU/H [kW]	Net Latent BTU/H [kW]	EER	SEER		
Rev. 6/30/10	RCFN-H*4824 (-GFD-12?RCM?)	42,500 [12.5]	30,050 [8.8]	12,450 [3.6]	13.00	16.00	76	1,225 [578]
	RCFN-H*4824 (-GFE-09?ZCM?)	43,500 [12.7]	32,600 [9.6]	10,900 [3.2]	13.00	15.10	76	1,400 [661]
	RCFN-H*4824 (-GFE-10?ZCM?)	42,500 [12.5]	30,500 [8.9]	12,000 [3.5]	13.00	15.50	76	1,225 [578]
	RCFN-H*4824 (-GFE-12?RCM?)	43,000 [12.6]	30,950 [9.1]	12,050 [3.5]	13.00	16.00	76	1,225 [578]
	RCFN-H*4824 (-GGD-12?RCM?)	43,000 [12.6]	30,500 [8.9]	12,500 [3.7]	13.00	16.00	76	1,225 [578]
	RCFN-H*4824 (-GGE-09?ZCM?)	43,000 [12.6]	30,950 [9.1]	12,050 [3.5]	13.00	16.00	76	1,225 [578]
	RCFN-H*4824 (-GGE-10?ZCM?)	43,500 [12.7]	32,600 [9.6]	10,900 [3.2]	13.00	15.10	76	1,400 [661]
	RCFN-H*4824 (-GGE-12?RCM?)	43,500 [12.7]	32,500 [9.5]	11,000 [3.2]	13.00	15.50	76	1,375 [649]
	RCFN-H*4824 (-GJD-12?RCM?)	43,000 [12.6]	30,500 [8.9]	12,500 [3.7]	13.00	16.00	76	1,225 [578]
	RCFN-H*4824 (-GJF-09?ZCM?)	43,000 [12.6]	30,950 [9.1]	12,050 [3.5]	13.00	16.00	76	1,225 [578]
	RCFN-H*4824 (-GJF-10?ZCM?)	43,500 [12.7]	32,600 [9.6]	10,900 [3.2]	13.00	15.10	76	1,400 [661]
	RCFN-H*4824 (-GJF-12?RCM?)	43,500 [12.7]	32,500 [9.5]	11,000 [3.2]	13.00	15.50	76	1,375 [649]
	RCFN-H*4824 (RGLE-07?BRQ?)	43,000 [12.6]	30,900 [9.1]	12,100 [3.5]	13.00	16.00	76	1,225 [578]
	RCFN-H*4824 (-GLE-10?BRM?)	44,000 [12.9]	32,950 [9.7]	11,050 [3.2]	13.00	16.00	76	1,400 [661]
	RCFN-H*4824 (-GLE-12?ARM?)	43,000 [12.6]	30,900 [9.1]	12,100 [3.5]	13.00	16.50	76	1,225 [578]
	RCFN-H*4824 (-GLR-07?BRQ?)	43,000 [12.6]	30,500 [8.9]	12,500 [3.7]	13.00	16.00	76	1,225 [578]
	RCFN-H*4824 (-GLR-10?BRM?)	43,500 [12.7]	32,050 [9.4]	11,450 [3.4]	13.00	16.00	76	1,375 [649]
	RCFN-H*4824 (-GLR-12?ARM?)	43,000 [12.6]	30,500 [8.9]	12,500 [3.7]	13.00	16.00	76	1,225 [578]
	RCFN-H*4824 (RGLT-07?BRQ?)	43,000 [12.6]	31,050 [9.1]	11,950 [3.5]	13.00	16.00	76	1,250 [590]
	RCFN-H*4824 (RGLT-10?BRM?)	43,000 [12.6]	31,050 [9.1]	11,950 [3.5]	13.00	16.00	76	1,250 [590]
	RCFN-H*4824 (RGLT-12?ARM?)	44,000 [12.9]	32,950 [9.7]	11,050 [3.2]	13.00	16.00	76	1,400 [661]
	RCFN-H*4824 (-GPE-07?BRQ?)	43,000 [12.6]	30,900 [9.1]	12,100 [3.5]	13.00	16.00	76	1,225 [578]
	RCFN-H*4824 (-GPE-10?BRM?)	43,000 [12.6]	30,900 [9.1]	12,100 [3.5]	13.00	16.00	76	1,225 [578]
	RCFN-H*4824 (-GPE-12?ARM?)	43,500 [12.7]	32,500 [9.5]	11,000 [3.2]	13.00	16.00	76	1,425 [672]
	RCFN-H*4824 (-GPR-07?BRQ?)	43,000 [12.6]	30,500 [8.9]	12,500 [3.7]	13.00	16.00	76	1,225 [578]
	RCFN-H*4824 (-GPR-10?BRM?)	42,500 [12.5]	30,050 [8.8]	12,450 [3.6]	13.00	16.00	76	1,225 [578]
042JAZ	RCFN-H*4824 (-GPR-12?ARM?)	43,000 [12.6]	30,750 [9.0]	12,250 [3.6]	13.00	16.00	76	1,250 [590]
	RCFN-H*4824 (RGPT-07?BRQ?)	43,500 [12.7]	31,950 [9.4]	11,550 [3.4]	13.00	16.00	76	1,325 [625]
	RCFN-H*4824 (RGPT-10?BRM?)	43,000 [12.6]	30,900 [9.1]	12,100 [3.5]	13.00	16.00	76	1,225 [578]
	RCFN-H*4824 (RGPT-12?ARM?)	44,000 [12.9]	32,950 [9.7]	11,050 [3.2]	13.00	16.00	76	1,375 [649]
	RCFN-H*4824 (-GRM-09?ZAJ?)	42,500 [12.5]	30,100 [8.8]	12,400 [3.6]	13.00	15.50	76	1,225 [578]
	RCFN-H*4824 (-GRM-12?RAJ?)	42,500 [12.5]	30,050 [8.8]	12,450 [3.6]	13.00	15.50	76	1,225 [578]
	ROLA-070E04 (RCFN-H*4824)	43,500 [12.7]	32,500 [9.5]	11,000 [3.2]	13.00	15.50	76	1,375 [649]
	ROLA-115E05 (RCFN-H*4824)	43,500 [12.7]	32,500 [9.5]	11,000 [3.2]	13.00	15.50	76	1,400 [661]
	-BHP-24 (RCHL-48A1)	39,500 [11.6]	27,200 [8.0]	12,300 [3.6]	12.85	15.00	76	1,400 [661]
	RCQD-4821 (-GFE-06?MCK?)	39,500 [11.6]	27,400 [8.0]	12,100 [3.5]	11.50	14.00	76	1,200 [566]
	RCQD-4821 (-GFE-09?ZCM?)	40,500 [11.9]	29,450 [8.6]	11,050 [3.2]	11.50	14.00	76	1,400 [661]
	RCQD-4821 (-GFE-10?ZCM?)	40,500 [11.9]	29,600 [8.7]	10,900 [3.2]	12.00	14.00	76	1,425 [672]
	RCQD-4821 (-GJF-06?MCK?)	40,000 [11.7]	27,850 [8.2]	12,150 [3.6]	12.00	14.50	76	1,200 [566]
	RCQD-4821 (-GJF-07?MCK?)	39,500 [11.6]	27,350 [8.0]	12,150 [3.6]	12.00	14.00	76	1,200 [566]
	RCQD-4821 (-GJF-09?ZCM?)	40,000 [11.7]	27,900 [8.2]	12,100 [3.5]	12.50	15.00	76	1,225 [578]
	RCQD-4821 (-GJF-10?ZCM?)	40,000 [11.7]	27,750 [8.1]	12,250 [3.6]	12.50	15.00	76	1,200 [566]
	RCQD-4821 (-GPE-05?BMK?)	39,500 [11.6]	27,350 [8.0]	12,150 [3.6]	12.00	14.50	76	1,200 [566]
	RCQD-4821 (-GPE-07?AMK?)	40,000 [11.7]	27,950 [8.2]	12,050 [3.5]	12.00	14.50	76	1,225 [578]
	RCQD-4821 (-GPE-07?BRQ?)	40,500 [11.9]	28,350 [8.3]	12,150 [3.6]	12.50	15.10	76	1,225 [578]
	RCQD-4821 (-GPE-10?BRM?)	40,500 [11.9]	28,350 [8.3]	12,150 [3.6]	12.50	15.50	76	1,225 [578]
	RCQD-4821 (RGPT-05?BMK?)	40,000 [11.7]	28,150 [8.2]	11,850 [3.5]	12.00	14.00	76	1,250 [590]
	RCQD-4821 (RGPT-07?AME?)	40,000 [11.7]	28,100 [8.2]	11,900 [3.5]	12.00	14.50	76	1,250 [590]
	RCQD-4821 (RGPT-07?BRQ?)	40,500 [11.9]	28,500 [8.4]	12,000 [3.5]	13.00	15.00	76	1,250 [590]
	RCQD-4821 (RGPT-10?BRM?)	40,500 [11.9]	28,500 [8.4]	12,000 [3.5]	13.00	15.50	76	1,250 [590]
	RCQD-4821 (-GRM-09?ZAJ?)	40,000 [11.7]	30,200 [8.8]	9,800 [2.9]	12.15	14.00	76	1,225 [578]
	RCQD-4821 (-GRM-10?ZAJ?)	39,500 [11.6]	29,250 [8.6]	10,250 [3.0]	12.25	14.00	76	1,150 [543]
	ROCA-070E03 (RCQD-4821)	40,000 [11.7]	27,800 [8.1]	12,200 [3.6]	12.00	14.50	76	1,200 [566]

① Highest sales volume tested combination required by D.O.E. test procedures.

[ ] Designates Metric Conversions

Performance Data @ AHRI Standard Conditions—Cooling: UAPM- JAZ (continued)

Model Numbers		80°F [26.5°C] DB/67°F [19.5°C] WB Indoor Air 95°F [35°C] DB Outdoor Air					Sound Rating dB	Indoor CFM [L/s]
Outdoor Unit UAPM-	Indoor Coil and/or Air Handler	Total Capacity BTU/H [kW]	Net Sensible BTU/H [kW]	Net Latent BTU/H [kW]	EER	SEER		
Rev. 6/30/10	ROCA-070E04 (RCQD-4821)	40,000 [11.7]	27,800 [8.1]	12,200 [3.6]	12.00	14.50	76	1,200 [566]
	ROLA-070E03 (RCQD-4821)	40,000 [11.7]	27,600 [8.1]	12,400 [3.6]	12.50	15.10	76	1,175 [554]
	ROLA-070E04 (RCQD-4821)	40,000 [11.7]	27,600 [8.1]	12,400 [3.6]	12.50	15.10	76	1,175 [554]
	ROLA-115E05 (RCQD-4821)	40,000 [11.7]	27,700 [8.1]	12,300 [3.6]	12.50	15.10	76	1,200 [566]
	RCQD-4821A*	39,500 [11.6]	27,800 [8.1]	11,700 [3.4]	11.85	14.00	76	1,255 [592]
	RCQD-4821A* (-GFD-09?ZCM?)	40,000 [11.7]	27,500 [8.1]	12,500 [3.7]	12.70	15.10	76	1,150 [543]
	RCQD-4821A* (-GFD-10?ZCM?)	40,000 [11.7]	27,650 [8.1]	12,350 [3.6]	12.60	15.00	76	1,175 [554]
	RCQD-4821A* (-GJD-09?ZCM?)	40,000 [11.7]	27,600 [8.1]	12,400 [3.6]	12.75	15.10	76	1,175 [554]
	RCQD-4821A* (-GJD-10?ZCM?)	40,000 [11.7]	27,600 [8.1]	12,400 [3.6]	12.75	15.10	76	1,175 [554]
	RCQD-4821A* (-GPR-07?AMK?)	40,000 [11.7]	27,800 [8.1]	12,200 [3.6]	12.40	14.50	76	1,200 [566]
	RCQD-4821A* (-GPR-07?BRQ?)	40,000 [11.7]	27,700 [8.1]	12,300 [3.6]	12.95	15.10	76	1,200 [566]
	RCQD-4821A* (-GPR-10?BRM?)	40,000 [11.7]	27,850 [8.2]	12,150 [3.6]	12.80	15.10	76	1,225 [578]
	RCQD-4824 (-GFE-09?ZCM?)	40,000 [11.7]	27,750 [8.1]	12,250 [3.6]	12.50	15.00	76	1,200 [566]
	RCQD-4824 (-GFE-10?ZCM?)	40,000 [11.7]	27,900 [8.2]	12,100 [3.5]	12.00	14.50	76	1,225 [578]
	RCQD-4824 (-GFE-12?RCM?)	40,500 [11.9]	28,350 [8.3]	12,150 [3.6]	12.50	15.00	76	1,225 [578]
	RCQD-4824 (-GJF-09?ZCM?)	40,000 [11.7]	27,850 [8.2]	12,150 [3.6]	12.50	15.00	76	1,225 [578]
	RCQD-4824 (-GJF-10?ZCM?)	40,500 [11.9]	29,400 [8.6]	11,100 [3.3]	12.00	14.50	76	1,400 [661]
	RCQD-4824 (-GJF-12?RCM?)	40,000 [11.7]	27,700 [8.1]	12,300 [3.6]	12.50	15.50	76	1,200 [566]
	RCQD-4824 (-GPE-07?BRQ?)	40,500 [11.9]	28,300 [8.3]	12,200 [3.6]	12.50	15.50	76	1,225 [578]
	RCQD-4824 (-GPE-10?BRM?)	40,500 [11.9]	28,300 [8.3]	12,200 [3.6]	12.50	15.50	76	1,225 [578]
	RCQD-4824 (-GPE-12?ARM?)	40,500 [11.9]	28,150 [8.2]	12,350 [3.6]	13.00	15.50	76	1,200 [566]
	RCQD-4824 (RGPT-07?BRQ?)	40,500 [11.9]	28,500 [8.4]	12,000 [3.5]	13.00	15.50	76	1,275 [602]
	RCQD-4824 (RGPT-10?BRM?)	40,500 [11.9]	28,450 [8.3]	12,050 [3.5]	13.00	15.50	76	1,275 [602]
042JAZ	RCQD-4824 (RGPT-12?ARM?)	40,500 [11.9]	28,300 [8.3]	12,200 [3.6]	13.00	15.50	76	1,225 [578]
	RCQD-4824 (-GRM-09?ZAJ?)	39,500 [11.6]	29,900 [8.8]	9,600 [2.8]	12.20	14.00	76	1,225 [578]
	RCQD-4824 (-GRM-10?ZAJ?)	39,500 [11.6]	29,450 [8.6]	10,050 [2.9]	12.30	14.00	76	1,150 [543]
	RCQD-4824 (-GRM-12?RAJ?)	40,000 [11.7]	30,350 [8.9]	9,650 [2.8]	12.45	14.50	76	1,225 [578]
	ROCA-070E03 (RCQD-4824)	40,000 [11.7]	27,750 [8.1]	12,250 [3.6]	12.50	15.00	76	1,200 [566]
	ROCA-070E04 (RCQD-4824)	40,000 [11.7]	27,750 [8.1]	12,250 [3.6]	12.50	15.00	76	1,200 [566]
	ROLA-070E03 (RCQD-4824)	40,000 [11.7]	27,600 [8.1]	12,400 [3.6]	12.50	15.10	76	1,175 [554]
	ROLA-070E04 (RCQD-4824)	40,000 [11.7]	27,600 [8.1]	12,400 [3.6]	12.50	15.10	76	1,175 [554]
	ROLA-115E05 (RCQD-4824)	40,000 [11.7]	27,700 [8.1]	12,300 [3.6]	13.00	15.50	76	1,200 [566]
	RCQD-4824A*	39,500 [11.6]	27,800 [8.1]	11,700 [3.4]	11.85	14.00	76	1,255 [592]
	RCQD-4824A* (-GFD-09?ZCM?)	40,000 [11.7]	27,500 [8.1]	12,500 [3.7]	12.80	15.10	76	1,150 [543]
	RCQD-4824A* (-GFD-10?ZCM?)	40,000 [11.7]	27,650 [8.1]	12,350 [3.6]	12.65	15.10	76	1,175 [554]
	RCQD-4824A* (-GFD-12?RCM?)	40,000 [11.7]	27,850 [8.2]	12,150 [3.6]	12.85	15.10	76	1,225 [578]
	RCQD-4824A* (-GJD-09?ZCM?)	40,000 [11.7]	27,600 [8.1]	12,400 [3.6]	12.80	15.10	76	1,175 [554]
	RCQD-4824A* (-GJD-10?ZCM?)	40,000 [11.7]	27,600 [8.1]	12,400 [3.6]	12.80	15.10	76	1,175 [554]
	RCQD-4824A* (-GPR-07?BRQ?)	40,000 [11.7]	27,700 [8.1]	12,300 [3.6]	13.00	15.10	76	1,200 [566]
	RCQD-4824A* (-GPR-10?BRM?)	40,500 [11.9]	28,350 [8.3]	12,150 [3.6]	12.90	15.10	76	1,225 [578]
	RCQD-4824A* (-GPR-12?ARM?)	40,500 [11.9]	28,500 [8.4]	12,000 [3.5]	13.05	15.50	76	1,250 [590]
	-HKL-HM3821 (RCSL-H*3821)	41,000 [12.0]	28,250 [8.3]	12,750 [3.7]	13.00	16.00	76	1,200 [566]
	-HLL-HM3821 (RCSL-H*3821)	41,000 [12.0]	28,800 [8.4]	12,200 [3.6]	13.00	16.00	76	1,220 [576]
	-HKL-HM4821 (RCSL-H*4821)	41,000 [12.0]	29,600 [8.7]	11,400 [3.3]	13.00	15.50	76	1,400 [661]
	-HLL-HM4821 (RCSL-H*4821)	41,000 [12.0]	29,600 [8.7]	11,400 [3.3]	13.10	15.50	76	1,400 [661]
	-HSL-HM4221 (RCSL-H*4821)	40,000 [11.7]	28,550 [8.4]	11,450 [3.4]	12.10	14.50	76	1,350 [637]
	RHPN-HM3624 (RCSN-H*3624)	43,000 [12.6]	30,450 [8.9]	12,550 [3.7]	13.00	16.00	76	1,200 [566]
	RCFL-H*4821+RXMD-C04 ①	47,500 [13.9]	33,350 [9.8]	14,150 [4.1]	12.25	14.50	76	1,575 [743]
	RCFL-A*4821 (-GFD-09?ZCM?)	46,500 [13.6]	30,650 [9.0]	15,850 [4.6]	12.50	15.00	76	1,325 [625]
048JAZ	RCFL-A*4821 (-GFD-10?ZCM?)	46,500 [13.6]	30,650 [9.0]	15,850 [4.6]	12.25	14.50	76	1,325 [625]
	RCFL-A*4821 (-GFE-09?ZCM?)	47,000 [13.8]	31,650 [9.3]	15,350 [4.5]	12.00	14.50	76	1,400 [661]
	RCFL-A*4821 (-GGD-09?ZCM?)	47,000 [13.8]	31,750 [9.3]	15,250 [4.5]	12.25	14.50	76	1,425 [672]
	RCFL-A*4821 (-GGD-10?ZCM?)	47,000 [13.8]	31,750 [9.3]	15,250 [4.5]	12.50	15.00	76	1,425 [672]

① Highest sales volume tested combination required by D.O.E. test procedures.

[ ] Designates Metric Conversions

Performance Data @ AHRI Standard Conditions—Cooling: UAPM- JAZ (continued)

Model Numbers		80°F [26.5°C] DB/67°F [19.5°C] WB Indoor Air 95°F [35°C] DB Outdoor Air					Sound Rating dB	Indoor CFM [L/s]
Outdoor Unit UAPM-	Indoor Coil and/or Air Handler	Total Capacity BTU/H [kW]	Net Sensible BTU/H [kW]	Net Latent BTU/H [kW]	EER	SEER		
Rev. 6/30/10	RCFL-A*4821 (-GGE-09?ZCM?)	47,000 [13.8]	31,600 [9.3]	15,400 [4.5]	12.50	14.50	76	1,400 [661]
	RCFL-A*4821 (-GGE-10?ZCM?)	47,000 [13.8]	31,650 [9.3]	15,350 [4.5]	12.00	14.50	76	1,400 [661]
	RCFL-A*4821 (-GLE-10?BRM?)	47,500 [13.9]	32,000 [9.4]	15,500 [4.5]	12.50	15.10	76	1,400 [661]
	RCFL-A*4821 (-GLR-07?BRQ?)	47,500 [13.9]	32,200 [9.4]	15,300 [4.5]	12.80	15.10	76	1,425 [672]
	RCFL-A*4821 (-GLR-10?BRM?)	47,000 [13.8]	31,350 [9.2]	15,650 [4.6]	12.85	15.10	76	1,375 [649]
	RCFL-A*4821 (RGLT-07?AME?)	46,500 [13.6]	30,650 [9.0]	15,850 [4.6]	12.00	14.50	76	1,325 [625]
	RCFL-A*4821 (RGLT-07?BRQ?)	47,500 [13.9]	32,200 [9.4]	15,300 [4.5]	12.50	15.10	76	1,425 [672]
	RCFL-A*4821 (RGLT-10?BRM?)	47,500 [13.9]	32,050 [9.4]	15,450 [4.5]	12.50	15.10	76	1,400 [661]
	RCFL-A*4821 (-GPE-07?BRQ?)	47,500 [13.9]	32,050 [9.4]	15,450 [4.5]	12.50	15.10	76	1,400 [661]
	RCFL-A*4821 (-GPE-10?BRM?)	47,500 [13.9]	32,050 [9.4]	15,450 [4.5]	12.50	15.10	76	1,400 [661]
	RCFL-A*4821 (-GPR-07?BRQ?)	47,500 [13.9]	32,200 [9.4]	15,300 [4.5]	12.80	15.10	76	1,425 [672]
	RCFL-A*4821 (-GPR-10?BRM?)	47,500 [13.9]	32,250 [9.4]	15,250 [4.5]	12.65	15.10	76	1,425 [672]
	RCFL-A*4821 (RGPT-07?AME?)	46,500 [13.6]	30,700 [9.0]	15,800 [4.6]	12.00	14.50	76	1,325 [625]
	RCFL-A*4821 (RGPT-07?BRQ?)	47,500 [13.9]	32,150 [9.4]	15,350 [4.5]	12.50	15.00	76	1,425 [672]
	RCFL-A*4821 (RGPT-10?BRM?)	47,500 [13.9]	32,150 [9.4]	15,350 [4.5]	12.50	15.50	76	1,425 [672]
	RCFL-A*4821 (-GTM-07?RBG?)	47,500 [13.9]	32,600 [9.6]	14,900 [4.4]	12.50	14.50	76	1,475 [696]
	RCFL-A*4821 (-GTM-09?ZAJ?)	47,000 [13.8]	31,600 [9.3]	15,400 [4.5]	12.50	14.50	76	1,400 [661]
	ROLA-070E04 (RCFL-A*4821)	47,000 [13.8]	31,400 [9.2]	15,600 [4.6]	12.50	15.10	76	1,375 [649]
	ROLA-115E05 (RCFL-A*4821)	47,000 [13.8]	31,550 [9.2]	15,450 [4.5]	12.50	15.10	76	1,400 [661]
	RCFL-A*4821+RXMD-C04	47,500 [13.9]	33,350 [9.8]	14,150 [4.1]	12.25	14.50	76	1,575 [743]
	RCFL-A*4824 (-GFD-09?ZCM?)	46,500 [13.6]	30,650 [9.0]	15,850 [4.6]	12.50	15.00	76	1,325 [625]
	RCFL-A*4824 (-GFD-10?ZCM?)	46,500 [13.6]	30,650 [9.0]	15,850 [4.6]	12.25	14.50	76	1,325 [625]
	RCFL-A*4824 (-GFD-12?RCM?)	47,500 [13.9]	32,600 [9.6]	14,900 [4.4]	12.55	15.00	76	1,475 [696]
	RCFL-A*4824 (-GFE-09?ZCM?)	47,000 [13.8]	31,650 [9.3]	15,350 [4.5]	12.00	14.50	76	1,400 [661]
	RCFL-A*4824 (-GFE-12?RCM?)	47,500 [13.9]	32,400 [9.5]	15,100 [4.4]	12.50	15.00	76	1,450 [684]
	RCFL-A*4824 (-GGD-09?ZCM?)	47,000 [13.8]	31,750 [9.3]	15,250 [4.5]	12.25	14.50	76	1,425 [672]
048JAZ	RCFL-A*4824 (-GGD-10?ZCM?)	47,000 [13.8]	31,750 [9.3]	15,250 [4.5]	12.50	15.00	76	1,425 [672]
	RCFL-A*4824 (-GGD-12?RCM?)	47,500 [13.9]	32,350 [9.5]	15,150 [4.4]	12.75	15.10	76	1,450 [684]
	RCFL-A*4824 (-GGE-09?ZCM?)	47,000 [13.8]	31,600 [9.3]	15,400 [4.5]	12.00	14.50	76	1,400 [661]
	RCFL-A*4824 (-GGE-12?RCM?)	47,000 [13.8]	31,350 [9.2]	15,650 [4.6]	12.50	15.10	76	1,375 [649]
	RCFL-A*4824 (-GLE-10?BRM?)	47,500 [13.9]	32,000 [9.4]	15,500 [4.5]	12.50	15.10	76	1,400 [661]
	RCFL-A*4824 (-GLE-12?ARM?)	47,500 [13.9]	32,150 [9.4]	15,350 [4.5]	12.50	15.10	76	1,425 [672]
	RCFL-A*4824 (-GLR-07?BRQ?)	47,500 [13.9]	32,200 [9.4]	15,300 [4.5]	12.80	15.10	76	1,425 [672]
	RCFL-A*4824 (-GLR-10?BRM?)	47,000 [13.8]	31,350 [9.2]	15,650 [4.6]	12.85	15.10	76	1,375 [649]
	RCFL-A*4824 (-GLR-12?ARM?)	48,000 [14.1]	33,750 [9.9]	14,250 [4.2]	12.55	15.10	76	1,600 [755]
	RCFL-A*4824 (RGLT-07?BRQ?)	47,500 [13.9]	32,200 [9.4]	15,300 [4.5]	12.50	15.10	76	1,425 [672]
	RCFL-A*4824 (RGLT-10?BRM?)	47,500 [13.9]	32,050 [9.4]	15,450 [4.5]	12.50	15.10	76	1,400 [661]
	RCFL-A*4824 (RGLT-12?ARM?)	47,500 [13.9]	31,650 [9.3]	15,850 [4.6]	13.00	15.50	76	1,350 [637]
	RCFL-A*4824 (-GPE-07?BRQ?)	47,500 [13.9]	32,050 [9.4]	15,450 [4.5]	12.50	15.10	76	1,400 [661]
	RCFL-A*4824 (-GPE-10?BRM?)	47,500 [13.9]	32,050 [9.4]	15,450 [4.5]	12.50	15.10	76	1,400 [661]
	RCFL-A*4824 (-GPE-12?ARM?)	47,500 [13.9]	32,150 [9.4]	15,350 [4.5]	12.50	15.10	76	1,425 [672]
	RCFL-A*4824 (-GPR-07?BRQ?)	47,500 [13.9]	32,200 [9.4]	15,300 [4.5]	12.80	15.10	76	1,425 [672]
	RCFL-A*4824 (-GPR-10?BRM?)	47,500 [13.9]	32,250 [9.4]	15,250 [4.5]	12.65	15.10	76	1,425 [672]
	RCFL-A*4824 (-GPR-12?ARM?)	48,000 [14.1]	33,700 [9.9]	14,300 [4.2]	12.60	15.10	76	1,575 [743]
	RCFL-A*4824 (RGPT-07?BRQ?)	48,500 [14.2]	34,100 [10.0]	14,400 [4.2]	13.00	15.50	76	1,550 [731]
	RCFL-A*4824 (RGPT-10?BRM?)	47,500 [13.9]	32,000 [9.4]	15,500 [4.5]	12.50	15.10	76	1,400 [661]
	RCFL-A*4824 (RGPT-12?ARM?)	47,500 [13.9]	31,650 [9.3]	15,850 [4.6]	13.00	15.50	76	1,350 [637]
	RCFL-A*4824 (RGTM-07?RBG?)	47,500 [13.9]	32,600 [9.6]	14,900 [4.4]	12.50	14.50	76	1,475 [696]
	RCFL-A*4824 (-GTM-09?ZAJ?)	47,000 [13.8]	31,600 [9.3]	15,400 [4.5]	12.50	14.50	76	1,400 [661]
	RCFL-A*4824 (-GTM-10?RBJ?)	47,500 [13.9]	32,200 [9.4]	15,300 [4.5]	12.50	15.10	76	1,425 [672]
	ROLA-070E04 (RCFL-A*4824)	47,000 [13.8]	31,400 [9.2]	15,600 [4.6]	12.50	15.10	76	1,375 [649]
	ROLA-115E05 (RCFL-A*4824)	47,500 [13.9]	32,800 [9.6]	14,700 [4.3]	12.00	14.50	76	1,500 [708]
	RCFL-A*4824+RXMD-C04	47,500 [13.9]	33,350 [9.8]	14,150 [4.1]	12.25	14.50	76	1,575 [743]

① Highest sales volume tested combination required by D.O.E. test procedures.

[ ] Designates Metric Conversions

Performance Data @ AHRI Standard Conditions—Cooling: UAPM- JAZ (continued)

Model Numbers		80°F [26.5°C] DB/67°F [19.5°C] WB Indoor Air 95°F [35°C] DB Outdoor Air					Sound Rating dB	Indoor CFM [L/s]
Outdoor Unit UAPM-	Indoor Coil and/or Air Handler	Total Capacity BTU/H [kW]	Net Sensible BTU/H [kW]	Net Latent BTU/H [kW]	EER	SEER		
Rev. 6/30/10	RCFL-H*4821 (-GFD-09?ZCM?)	46,500 [13.6]	30,650 [9.0]	15,850 [4.6]	12.50	15.00	76	1,325 [625]
	RCFL-H*4821 (-GFD-10?ZCM?)	46,500 [13.6]	30,650 [9.0]	15,850 [4.6]	12.25	14.50	76	1,325 [625]
	RCFL-H*4821 (-GFE-09?ZCM?)	47,000 [13.8]	31,650 [9.3]	15,350 [4.5]	12.00	14.50	76	1,400 [661]
	RCFL-H*4821 (-GGD-09?ZCM?)	47,000 [13.8]	31,750 [9.3]	15,250 [4.5]	12.25	14.50	76	1,425 [672]
	RCFL-H*4821 (-GGD-10?ZCM?)	47,000 [13.8]	31,750 [9.3]	15,250 [4.5]	12.50	15.00	76	1,425 [672]
	RCFL-H*4821 (-GGE-09?ZCM?)	47,000 [13.8]	31,600 [9.3]	15,400 [4.5]	12.00	14.50	76	1,400 [661]
	RCFL-H*4821 (-GGE-10?ZCM?)	47,000 [13.8]	31,650 [9.3]	15,350 [4.5]	12.00	14.50	76	1,400 [661]
	RCFL-H*4821 (-GJD-09?ZCM?)	47,000 [13.8]	31,750 [9.3]	15,250 [4.5]	12.50	15.00	76	1,425 [672]
	RCFL-H*4821 (-GJD-10?ZCM?)	47,000 [13.8]	31,750 [9.3]	15,250 [4.5]	12.55	15.00	76	1,425 [672]
	RCFL-H*4821 (-GJF-09?ZCM?)	47,000 [13.8]	31,600 [9.3]	15,400 [4.5]	12.00	14.50	76	1,400 [661]
	RCFL-H*4821 (-GJF-10?ZCM?)	47,000 [13.8]	31,650 [9.3]	15,350 [4.5]	12.00	14.50	76	1,400 [661]
	RCFL-H*4821 (-GLE-10?BRM?)	47,500 [13.9]	32,000 [9.4]	15,500 [4.5]	12.50	15.10	76	1,400 [661]
	RCFL-H*4821 (-GLR-07?BRQ?)	47,500 [13.9]	32,200 [9.4]	15,300 [4.5]	12.80	15.10	76	1,425 [672]
	RCFL-H*4821 (-GLR-10?BRM?)	47,000 [13.8]	31,350 [9.2]	15,650 [4.6]	12.85	15.10	76	1,375 [649]
	RCFL-H*4821 (RGLT-07?AME?)	46,500 [13.6]	30,650 [9.0]	15,850 [4.6]	12.00	14.50	76	1,325 [625]
	RCFL-H*4821 (RGLT-07?BRQ?)	47,500 [13.9]	32,200 [9.4]	15,300 [4.5]	12.50	15.10	76	1,425 [672]
	RCFL-H*4821 (RGLT-10?BRM?)	47,500 [13.9]	32,050 [9.4]	15,450 [4.5]	12.50	15.10	76	1,400 [661]
	RCFL-H*4821 (-GPE-07?BRQ?)	47,500 [13.9]	32,050 [9.4]	15,450 [4.5]	12.50	15.10	76	1,400 [661]
	RCFL-H*4821 (-GPE-10?BRM?)	47,500 [13.9]	32,050 [9.4]	15,450 [4.5]	12.50	15.10	76	1,400 [661]
	RCFL-H*4821 (-GPR-07?BRQ?)	47,500 [13.9]	32,200 [9.4]	15,300 [4.5]	12.80	15.10	76	1,425 [672]
	RCFL-H*4821 (-GPR-10?BRM?)	47,500 [13.9]	32,250 [9.4]	15,250 [4.5]	12.65	15.10	76	1,425 [672]
	RCFL-H*4821 (RGPT-07?AME?)	46,500 [13.6]	30,700 [9.0]	15,800 [4.6]	12.00	14.50	76	1,325 [625]
	RCFL-H*4821 (RGPT-07?BRQ?)	47,500 [13.9]	32,150 [9.4]	15,350 [4.5]	12.50	15.00	76	1,425 [672]
	RCFL-H*4821 (RGPT-10?BRM?)	47,500 [13.9]	32,150 [9.4]	15,350 [4.5]	12.50	15.50	76	1,425 [672]
	RCFL-H*4821 (-GRM-09?ZAJ?)	47,000 [13.8]	31,700 [9.3]	15,300 [4.5]	12.20	14.50	76	1,400 [661]
	RCFL-H*4821 (-GRM-10?ZAJ?)	47,000 [13.8]	31,850 [9.3]	15,150 [4.4]	12.15	14.50	76	1,425 [672]
048JAZ	RCFL-H*4821 (-GTM-07?RBG?)	47,500 [13.9]	32,600 [9.6]	14,900 [4.4]	12.50	14.50	76	1,475 [696]
	RCFL-H*4821 (-GTM-09?ZAJ?)	47,000 [13.8]	31,600 [9.3]	15,400 [4.5]	12.50	14.50	76	1,400 [661]
	ROLA-070E04 (RCFL-H*4821)	47,000 [13.8]	31,400 [9.2]	15,600 [4.6]	12.50	15.10	76	1,375 [649]
	ROLA-115E05 (RCFL-H*4821)	47,000 [13.8]	31,550 [9.2]	15,450 [4.5]	12.50	15.10	76	1,400 [661]
	RCFL-H*4824 (-GFD-09?ZCM?)	46,500 [13.6]	30,650 [9.0]	15,850 [4.6]	12.50	15.00	76	1,325 [625]
	RCFL-H*4824 (-GFD-10?ZCM?)	46,500 [13.6]	30,650 [9.0]	15,850 [4.6]	12.25	14.50	76	1,325 [625]
	RCFL-H*4824 (-GFD-12?RCM?)	47,500 [13.9]	32,600 [9.6]	14,900 [4.4]	12.55	15.00	76	1,475 [696]
	RCFL-H*4824 (-GFE-09?ZCM?)	47,000 [13.8]	31,650 [9.3]	15,350 [4.5]	12.00	14.50	76	1,400 [661]
	RCFL-H*4824 (-GFE-12?RCM?)	47,500 [13.9]	32,400 [9.5]	15,100 [4.4]	12.50	15.00	76	1,450 [684]
	RCFL-H*4824 (-GGD-09?ZCM?)	47,000 [13.8]	31,750 [9.3]	15,250 [4.5]	12.25	14.50	76	1,425 [672]
	RCFL-H*4824 (-GGD-10?ZCM?)	47,000 [13.8]	31,750 [9.3]	15,250 [4.5]	12.50	15.00	76	1,425 [672]
	RCFL-H*4824 (-GGD-12?RCM?)	47,500 [13.9]	32,350 [9.5]	15,150 [4.4]	12.75	15.10	76	1,450 [684]
	RCFL-H*4824 (-GGE-09?ZCM?)	47,000 [13.8]	31,600 [9.3]	15,400 [4.5]	12.00	14.50	76	1,400 [661]
	RCFL-H*4824 (-GGE-10?ZCM?)	47,000 [13.8]	31,650 [9.3]	15,350 [4.5]	12.00	14.50	76	1,400 [661]
	RCFL-H*4824 (-GGE-12?RCM?)	47,000 [13.8]	31,350 [9.2]	15,650 [4.6]	12.50	15.10	76	1,375 [649]
	RCFL-H*4824 (-GJD-09?ZCM?)	47,000 [13.8]	31,750 [9.3]	15,250 [4.5]	12.50	15.00	76	1,425 [672]
	RCFL-H*4824 (-GJD-10?ZCM?)	47,000 [13.8]	31,750 [9.3]	15,250 [4.5]	12.55	15.00	76	1,425 [672]
	RCFL-H*4824 (-GJD-12?RCM?)	47,500 [13.9]	32,350 [9.5]	15,150 [4.4]	12.75	15.10	76	1,450 [684]
	RCFL-H*4824 (-GJF-09?ZCM?)	47,000 [13.8]	31,600 [9.3]	15,400 [4.5]	12.00	14.50	76	1,400 [661]
	RCFL-H*4824 (-GJF-10?ZCM?)	47,000 [13.8]	31,650 [9.3]	15,350 [4.5]	12.00	14.50	76	1,400 [661]
	RCFL-H*4824 (-GJF-12?RCM?)	47,000 [13.8]	31,350 [9.2]	15,650 [4.6]	12.50	15.10	76	1,375 [649]
	RCFL-H*4824 (-GLE-10?BRM?)	47,500 [13.9]	32,000 [9.4]	15,500 [4.5]	12.50	15.10	76	1,400 [661]
	RCFL-H*4824 (-GLE-12?ARM?)	47,500 [13.9]	32,150 [9.4]	15,350 [4.5]	12.50	15.10	76	1,425 [672]
	RCFL-H*4824 (-GLR-07?BRQ?)	47,500 [13.9]	32,200 [9.4]	15,300 [4.5]	12.80	15.10	76	1,425 [672]
	RCFL-H*4824 (-GLR-10?BRM?)	47,000 [13.8]	31,350 [9.2]	15,650 [4.6]	12.85	15.10	76	1,375 [649]
	RCFL-H*4824 (-GLR-12?ARM?)	48,000 [14.1]	33,750 [9.9]	14,250 [4.2]	12.55	15.10	76	1,600 [755]
	RCFL-H*4824 (RGLT-07?BRQ?)	47,500 [13.9]	32,200 [9.4]	15,300 [4.5]	12.50	15.10	76	1,425 [672]

① Highest sales volume tested combination required by D.O.E. test procedures.

[ ] Designates Metric Conversions

Performance Data @ AHRI Standard Conditions—Cooling: UAPM- JAZ (continued)

Model Numbers		80°F [26.5°C] DB/67°F [19.5°C] WB Indoor Air 95°F [35°C] DB Outdoor Air					Sound Rating dB	Indoor CFM [L/s]
Outdoor Unit UAPM-	Indoor Coil and/or Air Handler	Total Capacity BTU/H [kW]	Net Sensible BTU/H [kW]	Net Latent BTU/H [kW]	EER	SEER		
Rev. 6/30/10	RCFL-H*4824 (RGLT-10?BRM?)	47,500 [13.9]	32,050 [9.4]	15,450 [4.5]	12.50	15.10	76	1,400 [661]
	RCFL-H*4824 (RGLT-12?ARM?)	47,500 [13.9]	31,650 [9.3]	15,850 [4.6]	13.00	15.50	76	1,350 [637]
	RCFL-H*4824 (-GPE-07?BRQ?)	47,500 [13.9]	32,050 [9.4]	15,450 [4.5]	12.50	15.10	76	1,400 [661]
	RCFL-H*4824 (-GPE-10?BRM?)	47,500 [13.9]	32,050 [9.4]	15,450 [4.5]	12.50	15.10	76	1,400 [661]
	RCFL-H*4824 (-GPE-12?ARM?)	47,500 [13.9]	32,150 [9.4]	15,350 [4.5]	12.50	15.10	76	1,425 [672]
	RCFL-H*4824 (-GPR-07?BRQ?)	47,500 [13.9]	32,200 [9.4]	15,300 [4.5]	12.80	15.10	76	1,425 [672]
	RCFL-H*4824 (-GPR-10?BRM?)	47,500 [13.9]	32,250 [9.4]	15,250 [4.5]	12.65	15.10	76	1,425 [672]
	RCFL-H*4824 (-GPR-12?ARM?)	48,000 [14.1]	33,700 [9.9]	14,300 [4.2]	12.60	15.10	76	1,575 [743]
	RCFL-H*4824 (RGPT-07?BRQ?)	48,500 [14.2]	34,100 [10.0]	14,400 [4.2]	13.00	15.50	76	1,550 [731]
	RCFL-H*4824 (RGPT-10?BRM?)	47,500 [13.9]	32,000 [9.4]	15,500 [4.5]	12.50	15.10	76	1,400 [661]
	RCFL-H*4824 (RGPT-12?ARM?)	47,500 [13.9]	31,650 [9.3]	15,850 [4.6]	13.00	15.50	76	1,350 [637]
	RCFL-H*4824 (-GRM-09?ZAJ?)	47,000 [13.8]	31,700 [9.3]	15,300 [4.5]	12.20	14.50	76	1,400 [661]
	RCFL-H*4824 (-GRM-10?ZAJ?)	47,000 [13.8]	31,850 [9.3]	15,150 [4.4]	12.15	14.00	76	1,425 [672]
	RCFL-H*4824 (-GRM-12?RAJ?)	47,000 [13.8]	31,750 [9.3]	15,250 [4.5]	12.50	14.50	76	1,425 [672]
	RCFL-H*4824 (-GTM-07?RBG?)	47,500 [13.9]	32,600 [9.6]	14,900 [4.4]	12.50	14.50	76	1,475 [696]
	RCFL-H*4824 (-GTM-09?ZAJ?)	47,000 [13.8]	31,600 [9.3]	15,400 [4.5]	12.50	14.50	76	1,400 [661]
	RCFL-H*4824 (-GTM-10?RBJ?)	47,500 [13.9]	32,200 [9.4]	15,300 [4.5]	12.50	15.10	76	1,425 [672]
	ROLA-070E04 (RCFL-H*4824)	47,000 [13.8]	31,400 [9.2]	15,600 [4.6]	12.50	15.10	76	1,375 [649]
	ROLA-115E05 (RCFL-H*4824)	47,500 [13.9]	32,800 [9.6]	14,700 [4.3]	12.00	14.50	76	1,500 [708]
	RCFL-H*4824+RXMD-C04	47,500 [13.9]	33,350 [9.8]	14,150 [4.1]	12.25	14.50	76	1,575 [743]
	RCFM-H*4821	47,500 [13.9]	33,350 [9.8]	14,150 [4.1]	12.25	14.50	76	1,575 [743]
	RCFN-H*4824	51,000 [14.9]	37,650 [11.0]	13,350 [3.9]	12.50	15.00	76	1,600 [755]
	RCFN-H*4824 (-GFD-12?RCM?)	51,500 [15.1]	38,400 [11.3]	13,100 [3.8]	13.00	15.50	76	1,650 [779]
	RCFN-H*4824 (-GFE-12?RCM?)	50,500 [14.8]	36,050 [10.6]	14,450 [4.2]	13.00	16.00	76	1,450 [684]
	RCFN-H*4824 (-GGD-12?RCM?)	51,000 [14.9]	36,400 [10.7]	14,600 [4.3]	13.00	16.00	76	1,450 [684]
	RCFN-H*4824 (-GGE-12?RCM?)	51,500 [15.1]	37,950 [11.1]	13,550 [4.0]	13.00	15.50	76	1,575 [743]
048JAZ	RCFN-H*4824 (-GJD-12?RCM?)	51,000 [14.9]	36,400 [10.7]	14,600 [4.3]	13.00	16.00	76	1,450 [684]
	RCFN-H*4824 (-GJF-12?RCM?)	51,500 [15.1]	37,950 [11.1]	13,550 [4.0]	13.00	15.50	76	1,575 [743]
	RCFN-H*4824 (RGLE-07?BRQ?)	51,500 [15.1]	38,150 [11.2]	13,350 [3.9]	13.00	15.50	76	1,600 [755]
	RCFN-H*4824 (-GLE-10?BRM?)	51,500 [15.1]	38,100 [11.2]	13,400 [3.9]	13.00	16.00	76	1,600 [755]
	RCFN-H*4824 (-GLE-12?ARM?)	51,500 [15.1]	38,100 [11.2]	13,400 [3.9]	13.00	16.00	76	1,600 [755]
	RCFN-H*4824 (-GLR-10?BRM?)	51,500 [15.1]	38,000 [11.1]	13,500 [4.0]	13.00	16.00	76	1,575 [743]
	RCFN-H*4824 (-GLR-12?ARM?)	51,500 [15.1]	38,000 [11.1]	13,500 [4.0]	13.00	16.00	76	1,600 [755]
	RCFN-H*4824 (RGLT-07?BRQ?)	50,000 [14.6]	35,750 [10.5]	14,250 [4.2]	13.00	15.50	76	1,450 [684]
	RCFN-H*4824 (RGLT-10?BRM?)	50,000 [14.6]	35,750 [10.5]	14,250 [4.2]	13.00	15.50	76	1,450 [684]
	RCFN-H*4824 (RGLT-12?ARM?)	51,000 [14.9]	38,600 [11.3]	12,400 [3.6]	12.50	15.10	76	1,700 [802]
	RCFN-H*4824 (-GPE-07?BRQ?)	51,500 [15.1]	38,150 [11.2]	13,350 [3.9]	13.00	15.50	76	1,600 [755]
	RCFN-H*4824 (-GPE-10?BRM?)	51,500 [15.1]	37,750 [11.1]	13,750 [4.0]	13.00	16.00	76	1,550 [731]
	RCFN-H*4824 (-GPE-12?ARM?)	51,000 [14.9]	37,050 [10.9]	13,950 [4.1]	13.00	16.00	76	1,525 [720]
	RCFN-H*4824 (-GPR-07?BRQ?)	51,500 [15.1]	38,000 [11.1]	13,500 [4.0]	13.00	15.50	76	1,625 [767]
	RCFN-H*4824 (-GPR-10?BRM?)	51,500 [15.1]	38,100 [11.2]	13,400 [3.9]	13.00	15.50	76	1,625 [767]
	RCFN-H*4824 (-GPR-12?ARM?)	51,500 [15.1]	38,000 [11.1]	13,500 [4.0]	13.00	16.00	76	1,575 [743]
	RCFN-H*4824 (RGPT-07?BRQ?)	50,500 [14.8]	36,900 [10.8]	13,600 [4.0]	13.00	16.00	76	1,550 [731]
	RCFN-H*4824 (RGPT-10?BRM?)	50,000 [14.6]	35,750 [10.5]	14,250 [4.2]	13.00	15.50	76	1,450 [684]
	RCFN-H*4824 (RGPT-12?ARM?)	51,000 [14.9]	38,600 [11.3]	12,400 [3.6]	12.50	15.10	76	1,700 [802]
	ROLA-115E05 (RCFN-H*4824)	50,000 [14.6]	36,900 [10.8]	13,100 [3.8]	12.50	15.10	76	1,600 [755]
	-BHP-24 (RCHL-48A1)	47,000 [13.8]	32,000 [9.4]	15,000 [4.4]	12.60	15.00	76	1,600 [755]
	RCQD-4821 (-GFE-09?ZCM?)	47,000 [13.8]	31,500 [9.2]	15,500 [4.5]	12.00	14.00	76	1,400 [661]
	RCQD-4821 (-GJF-09?ZCM?)	47,500 [13.9]	32,000 [9.4]	15,500 [4.5]	12.00	14.50	76	1,400 [661]
	RCQD-4821 (-GJF-10?ZCM?)	47,000 [13.8]	31,500 [9.2]	15,500 [4.5]	12.00	14.00	76	1,400 [661]
	RCQD-4821 (-GPE-07?BRQ?)	47,500 [13.9]	31,900 [9.3]	15,600 [4.6]	12.50	15.00	76	1,400 [661]
	RCQD-4821 (-GPE-10?BRM?)	48,000 [14.1]	33,800 [9.9]	14,200 [4.2]	12.00	14.00	76	1,625 [767]
	RCQD-4821 (RGPT-07?BRQ?)	48,500 [14.2]	33,850 [9.9]	14,650 [4.3]	12.50	15.10	76	1,550 [731]

① Highest sales volume tested combination required by D.O.E. test procedures.

[ ] Designates Metric Conversions

Performance Data @ AHRI Standard Conditions—Cooling: UAPM- JAZ (continued)

Model Numbers		80°F [26.5°C] DB/67°F [19.5°C] WB Indoor Air 95°F [35°C] DB Outdoor Air					Sound Rating dB	Indoor CFM [L/s]
Outdoor Unit UAPM-	Indoor Coil and/or Air Handler	Total Capacity BTU/H [kW]	Net Sensible BTU/H [kW]	Net Latent BTU/H [kW]	EER	SEER		
Rev. 6/30/10	RCQD-4821 (RGPT-10?BRM?)	47,500 [13.9]	32,050 [9.4]	15,450 [4.5]	12.50	15.10	76	1,425 [672]
	RCQD-4821 (-GRM-09?ZAJ?)	48,000 [14.1]	35,100 [10.3]	12,900 [3.8]	12.50	14.50	76	1,400 [661]
	RCQD-4821 (-GRM-10?ZAJ?)	48,000 [14.1]	35,250 [10.3]	12,750 [3.7]	12.45	14.50	76	1,425 [672]
	ROLA-070E04 (RCQD-4821)	47,500 [13.9]	31,750 [9.3]	15,750 [4.6]	12.00	14.50	76	1,375 [649]
	RCQD-4821A*	47,500 [13.9]	33,750 [9.9]	13,750 [4.0]	11.95	14.00	76	1,600 [755]
	RCQD-4821A* (-GPR-07?BRQ?)	48,000 [14.1]	34,450 [10.1]	13,550 [4.0]	12.30	14.50	76	1,625 [767]
	RCQD-4824 (-GFE-09?ZCM?)	47,000 [13.8]	31,500 [9.2]	15,500 [4.5]	12.00	14.50	76	1,400 [661]
	RCQD-4824 (-GFE-10?ZCM?)	47,500 [13.9]	32,200 [9.4]	15,300 [4.5]	12.00	14.50	76	1,425 [672]
	RCQD-4824 (-GFE-12?RCM?)	47,500 [13.9]	32,250 [9.4]	15,250 [4.5]	12.00	14.50	76	1,450 [684]
	RCQD-4824 (-GJF-09?ZCM?)	47,500 [13.9]	31,950 [9.4]	15,550 [4.6]	12.00	14.50	76	1,400 [661]
	RCQD-4824 (-GJF-10?ZCM?)	47,500 [13.9]	32,000 [9.4]	15,500 [4.5]	12.00	14.50	76	1,400 [661]
	RCQD-4824 (-GJF-12?RCM?)	48,500 [14.2]	34,250 [10.0]	14,250 [4.2]	12.00	14.50	76	1,575 [743]
	RCQD-4824 (-GPE-07?BRQ?)	48,500 [14.2]	34,250 [10.0]	14,250 [4.2]	12.00	14.50	76	1,600 [755]
	RCQD-4824 (-GPE-10?BRM?)	48,000 [14.1]	33,800 [9.9]	14,200 [4.2]	12.00	14.50	76	1,625 [767]
	RCQD-4824 (-GPE-12?ARM?)	48,500 [14.2]	34,250 [10.0]	14,250 [4.2]	12.00	14.50	76	1,625 [767]
	RCQD-4824 (RGPT-07?BRQ?)	48,500 [14.2]	33,800 [9.9]	14,700 [4.3]	12.50	15.10	76	1,550 [731]
048JAZ	RCQD-4824 (RGPT-10?BRM?)	48,000 [14.1]	32,700 [9.6]	15,300 [4.5]	12.50	15.10	76	1,450 [684]
	RCQD-4824 (RGPT-12?ARM?)	48,000 [14.1]	32,300 [9.5]	15,700 [4.6]	12.50	15.10	76	1,400 [661]
	RCQD-4824 (-GRM-09?ZAJ?)	48,000 [14.1]	35,350 [10.4]	12,650 [3.7]	12.50	14.50	76	1,400 [661]
	RCQD-4824 (-GRM-10?ZAJ?)	48,000 [14.1]	35,550 [10.4]	12,450 [3.6]	12.45	14.50	76	1,425 [672]
	RCQD-4824 (-GRM-12?RAJ?)	48,000 [14.1]	35,450 [10.4]	12,550 [3.7]	12.85	15.00	76	1,425 [672]
	ROLA-070E04 (RCQD-4824)	47,500 [13.9]	31,750 [9.3]	15,750 [4.6]	12.50	15.00	76	1,375 [649]
	ROLA-115E05 (RCQD-4824)	47,500 [13.9]	31,900 [9.3]	15,600 [4.6]	12.50	15.00	76	1,400 [661]
	RCQD-4824A*	47,500 [13.9]	33,750 [9.9]	13,750 [4.0]	11.95	14.00	76	1,600 [755]
	RCQD-4824A* (-GPR-07?BRQ?)	48,000 [14.1]	34,450 [10.1]	13,550 [4.0]	12.30	14.50	76	1,625 [767]
	RCQD-4824A* (-GPR-12?ARM?)	48,000 [14.1]	34,150 [10.0]	13,850 [4.1]	12.35	14.50	76	1,575 [743]
	-HKL-HM4821 (RCSL-H*4821)	47,500 [13.9]	31,950 [9.4]	15,550 [4.6]	13.00	15.50	76	1,400 [661]
	-HLL-HM4821 (RCSL-H*4821)	47,500 [13.9]	31,950 [9.4]	15,550 [4.6]	13.00	16.00	76	1,400 [661]
	-HSL-HM4821 (RCSL-H*4821)	47,500 [13.9]	32,950 [9.7]	14,550 [4.3]	12.30	14.50	76	1,525 [720]
	-HSL-HM4824 (RCSL-H*4821)	47,500 [13.9]	32,800 [9.6]	14,700 [4.3]	12.30	14.50	76	1,500 [708]
	-HKL-HM4824 (RCSL-H*4824)	48,500 [14.2]	34,050 [10.0]	14,450 [4.2]	13.00	16.00	76	1,600 [755]
	-HLL-HM4824 (RCSL-H*4824)	49,000 [14.4]	34,900 [10.2]	14,100 [4.1]	13.00	16.00	76	1,625 [767]
	RHPN-HM4824 (RCSN-H*4824)	52,000 [15.2]	38,400 [11.3]	13,600 [4.0]	13.00	16.00	76	1,600 [755]
	RCFL-H*6024+RXMD-C04 ①	52,500 [15.4]	37,300 [10.9]	15,200 [4.5]	12.50	14.75	76	1,525 [720]
	RCFL-A*6024 (-GFD-12?RCM?)	53,500 [15.7]	39,150 [11.5]	14,350 [4.2]	12.50	14.50	76	1,650 [779]
	RCFL-A*6024 (-GGE-12?RCM?)	53,000 [15.5]	38,100 [11.2]	14,900 [4.4]	12.50	14.50	76	1,575 [743]
	RCFL-A*6024 (RGLE-07?BRQ?)	53,000 [15.5]	38,300 [11.2]	14,700 [4.3]	12.50	14.50	76	1,600 [755]
	RCFL-A*6024 (-GLE-10?BRM?)	53,500 [15.7]	38,750 [11.4]	14,750 [4.3]	12.50	15.10	76	1,600 [755]
	RCFL-A*6024 (-GLE-12?ARM?)	53,500 [15.7]	38,750 [11.4]	14,750 [4.3]	12.50	15.10	76	1,600 [755]
	RCFL-A*6024 (-GLR-07?BRQ?)	53,500 [15.7]	38,950 [11.4]	14,550 [4.3]	12.50	14.50	76	1,625 [767]
	RCFL-A*6024 (-GLR-10?BRM?)	53,000 [15.5]	38,100 [11.2]	14,900 [4.4]	12.50	15.00	76	1,575 [743]
	RCFL-A*6024 (-GLR-12?ARM?)	53,500 [15.7]	38,750 [11.4]	14,750 [4.3]	12.50	15.10	76	1,600 [755]
	RCFL-A*6024 (RGLT-12?ARM?)	53,500 [15.7]	39,500 [11.6]	14,000 [4.1]	12.00	14.50	76	1,700 [802]
056JAZ	RCFL-A*6024 (-GPE-07?BRQ?)	53,000 [15.5]	38,300 [11.2]	14,700 [4.3]	12.50	14.50	76	1,600 [755]
	RCFL-A*6024 (-GPE-10?BRM?)	53,000 [15.5]	37,700 [11.0]	15,300 [4.5]	12.50	15.10	76	1,550 [731]
	RCFL-A*6024 (-GPE-12?ARM?)	53,500 [15.7]	38,950 [11.4]	14,550 [4.3]	12.50	15.10	76	1,625 [767]
	RCFL-A*6024 (-GPR-07?BRQ?)	53,500 [15.7]	38,950 [11.4]	14,550 [4.3]	12.50	15.00	76	1,625 [767]
	RCFL-A*6024 (-GPR-10?BRM?)	53,000 [15.5]	37,700 [11.0]	15,300 [4.5]	12.50	15.00	76	1,525 [720]
	RCFL-A*6024 (-GPR-12?ARM?)	53,000 [15.5]	38,050 [11.1]	14,950 [4.4]	12.50	15.10	76	1,575 [743]
	RCFL-A*6024 (RGPT-07?BRQ?)	53,000 [15.5]	37,600 [11.0]	15,400 [4.5]	13.00	15.50	76	1,550 [731]
	RCFL-A*6024 (RGPT-10?BRM?)	53,500 [15.7]	39,550 [11.6]	13,950 [4.1]	12.00	14.50	76	1,700 [802]
	RCFL-A*6024 (RGPT-12?ARM?)	53,500 [15.7]	39,550 [11.6]	13,950 [4.1]	12.00	14.50	76	1,700 [802]
	ROLA-115E05 (RCFL-A*6024)	52,500 [15.4]	37,250 [10.9]	15,250 [4.5]	12.00	14.50	76	1,500 [708]

① Highest sales volume tested combination required by D.O.E. test procedures.

[ ] Designates Metric Conversions

Performance Data @ AHRI Standard Conditions—Cooling: UAPM- JAZ (continued)

Model Numbers		80°F [26.5°C] DB/67°F [19.5°C] WB Indoor Air 95°F [35°C] DB Outdoor Air					Sound Rating dB	Indoor CFM [L/s]
Outdoor Unit UAPM-	Indoor Coil and/or Air Handler	Total Capacity BTU/H [kW]	Net Sensible BTU/H [kW]	Net Latent BTU/H [kW]	EER	SEER		
Rev. 6/30/10	RCFL-A*6024+RXMD-C04	52,500 [15.4]	37,300 [10.9]	15,200 [4.5]	12.50	14.50	76	1,525 [720]
	RCFL-H*6024 (-GFD-12?RCM?)	53,500 [15.7]	39,150 [11.5]	14,350 [4.2]	12.50	14.50	76	1,650 [779]
	RCFL-H*6024 (-GGE-12?RCM?)	53,000 [15.5]	38,100 [11.2]	14,900 [4.4]	12.50	14.50	76	1,575 [743]
	RCFL-H*6024 (-GJF-12?RCM?)	53,000 [15.5]	38,100 [11.2]	14,900 [4.4]	12.50	14.50	76	1,575 [743]
	RCFL-H*6024 (RGLE-07?BRQ?)	53,000 [15.5]	38,300 [11.2]	14,700 [4.3]	12.50	14.50	76	1,600 [755]
	RCFL-H*6024 (-GLE-10?BRM?)	53,500 [15.7]	38,750 [11.4]	14,750 [4.3]	12.50	15.10	76	1,600 [755]
	RCFL-H*6024 (-GLE-12?ARM?)	53,500 [15.7]	38,750 [11.4]	14,750 [4.3]	12.50	15.10	76	1,600 [755]
	RCFL-H*6024 (-GLR-07?BRQ?)	53,500 [15.7]	38,950 [11.4]	14,550 [4.3]	12.50	14.50	76	1,625 [767]
	RCFL-H*6024 (-GLR-10?BRM?)	53,000 [15.5]	38,100 [11.2]	14,900 [4.4]	12.50	15.00	76	1,575 [743]
	RCFL-H*6024 (-GLR-12?ARM?)	53,500 [15.7]	38,750 [11.4]	14,750 [4.3]	12.50	15.10	76	1,600 [755]
	RCFL-H*6024 (RGLT-12?ARM?)	53,500 [15.7]	39,500 [11.6]	14,000 [4.1]	12.00	14.50	76	1,700 [802]
	RCFL-H*6024 (RGPE-07?BRQ?)	53,000 [15.5]	38,300 [11.2]	14,700 [4.3]	12.50	14.50	76	1,600 [755]
	RCFL-H*6024 (-GPE-10?BRM?)	53,000 [15.5]	37,700 [11.0]	15,300 [4.5]	12.50	15.10	76	1,550 [731]
	RCFL-H*6024 (-GPE-12?ARM?)	53,500 [15.7]	38,950 [11.4]	14,550 [4.3]	12.50	15.10	76	1,625 [767]
	RCFL-H*6024 (-GPR-07?BRQ?)	53,500 [15.7]	38,950 [11.4]	14,550 [4.3]	12.50	15.00	76	1,625 [767]
	RCFL-H*6024 (-GPR-10?BRM?)	53,000 [15.5]	37,700 [11.0]	15,300 [4.5]	12.50	15.00	76	1,525 [720]
	RCFL-H*6024 (-GPR-12?ARM?)	53,000 [15.5]	38,050 [11.1]	14,950 [4.4]	12.50	15.10	76	1,575 [743]
	RCFL-H*6024 (RGPT-07?BRQ?)	53,000 [15.5]	37,600 [11.0]	15,400 [4.5]	13.00	15.50	76	1,550 [731]
	RCFL-H*6024 (RGPT-10?BRM?)	53,500 [15.7]	39,550 [11.6]	13,950 [4.1]	12.00	14.50	76	1,700 [802]
	RCFL-H*6024 (RGPT-12?ARM?)	53,500 [15.7]	39,550 [11.6]	13,950 [4.1]	12.00	14.50	76	1,700 [802]
	ROLA-115E05 (RCFL-H*6024)	52,500 [15.4]	37,250 [10.9]	15,250 [4.5]	12.00	14.50	76	1,500 [708]
	-BHP-24 (RCHL-60A1)	48,500 [14.2]	31,450 [9.2]	17,050 [5.0]	11.50	14.00	76	1,600 [755]
	-BHP-25 (RCHL-60A1)	49,500 [14.5]	33,850 [9.9]	15,650 [4.6]	11.50	14.00	76	1,800 [849]
056JAZ	RCQD-6024 (-GFD-12?RCM?)	50,000 [14.6]	35,150 [10.3]	14,850 [4.4]	11.50	14.00	76	1,650 [779]
	RCQD-6024 (-GFE-09?ZCM?)	49,000 [14.4]	32,500 [9.5]	16,500 [4.8]	11.50	14.00	76	1,400 [661]
	RCQD-6024 (-GFE-10?ZCM?)	49,000 [14.4]	32,700 [9.6]	16,300 [4.8]	11.00	13.50	76	1,425 [672]
	RCQD-6024 (-GFE-12?RCM?)	49,500 [14.5]	34,400 [10.1]	15,100 [4.4]	11.00	13.50	76	1,625 [767]
	RCQD-6024 (-GJD-09?ZCM?)	49,000 [14.4]	32,600 [9.6]	16,400 [4.8]	11.50	14.00	76	1,425 [672]
	RCQD-6024 (-GJD-10?ZCM?)	49,000 [14.4]	32,600 [9.6]	16,400 [4.8]	11.50	14.00	76	1,425 [672]
	RCQD-6024 (-GJD-12?RCM?)	49,500 [14.5]	33,200 [9.7]	16,300 [4.8]	11.50	14.00	76	1,450 [684]
	RCQD-6024 (-GJF-09?ZCM?)	49,000 [14.4]	32,450 [9.5]	16,550 [4.8]	11.50	14.00	76	1,400 [661]
	RCQD-6024 (-GJF-10?ZCM?)	49,000 [14.4]	32,500 [9.5]	16,500 [4.8]	11.50	14.00	76	1,400 [661]
	RCQD-6024 (-GJF-12?RCM?)	50,000 [14.6]	34,800 [10.2]	15,200 [4.5]	11.50	14.00	76	1,575 [743]
	RCQD-6024 (-GPE-07?BRQ?)	50,000 [14.6]	34,800 [10.2]	15,200 [4.5]	11.50	14.00	76	1,600 [755]
	RCQD-6024 (-GPE-10?BRM?)	50,000 [14.6]	34,800 [10.2]	15,200 [4.5]	11.50	14.00	76	1,625 [767]
	RCQD-6024 (-GPE-12?ARM?)	50,000 [14.6]	34,750 [10.2]	15,250 [4.5]	11.50	14.00	76	1,625 [767]
	RCQD-6024 (-GPR-07?BRQ?)	50,000 [14.6]	34,800 [10.2]	15,200 [4.5]	11.50	14.00	76	1,625 [767]
	RCQD-6024 (-GPR-10?BRM?)	49,500 [14.5]	33,800 [9.9]	15,700 [4.6]	11.50	14.00	76	1,525 [720]
	RCQD-6024 (-GPR-12?ARM?)	50,000 [14.6]	34,750 [10.2]	15,250 [4.5]	11.50	14.00	76	1,575 [743]
	RCQD-6024 (RGPT-07?BRQ?)	50,000 [14.6]	34,350 [10.1]	15,650 [4.6]	12.00	14.50	76	1,550 [731]
	RCQD-6024 (RGPT-10?BRM?)	49,500 [14.5]	33,200 [9.7]	16,300 [4.8]	12.00	14.50	76	1,450 [684]
	RCQD-6024 (RGPT-12?ARM?)	49,500 [14.5]	32,800 [9.6]	16,700 [4.9]	12.00	14.50	76	1,400 [661]
	RCQD-6024 (-GRM-12?RAJ?)	49,500 [14.5]	34,050 [10.0]	15,450 [4.5]	11.00	13.50	76	1,550 [731]
	ROCA-070E04 (RCQD-6024)	48,500 [14.2]	32,050 [9.4]	16,450 [4.8]	11.50	13.50	76	1,400 [661]
	ROLA-115E05 (RCQD-6024)	49,000 [14.4]	32,400 [9.5]	16,600 [4.9]	11.50	14.00	76	1,400 [661]
	RCQD-6024+RXMD-C04	49,000 [14.4]	34,050 [10.0]	14,950 [4.4]	11.00	13.50	76	1,600 [755]
	-HKL-HM6024 (RCSL-H*6024)	54,000 [15.8]	39,100 [11.5]	14,900 [4.4]	13.00	16.00	76	1,600 [755]
	-HLL-HM6024 (RCSL-H*6024)	54,000 [15.8]	38,670 [11.3]	15,330 [4.5]	13.00	16.00	76	1,550 [731]
	RCFL-H*6024+RXMD-C04 ①	60,500 [17.7]	41,650 [12.2]	18,850 [5.5]	12.65	14.50	76	1,600 [755]
	RCFL-H*6024A*+RXMD-C04 ①	60,500 [17.7]	41,650 [12.2]	18,850 [5.5]	12.65	14.50	76	1,600 [755]
060JAZ	RCFL-A*6024 (-GFD-12?RCM?)	61,000 [17.9]	42,550 [12.5]	18,450 [5.4]	12.65	14.50	76	1,650 [779]
	RCFL-A*6024 (-GGD-12?RCM?)	60,500 [17.7]	42,100 [12.3]	18,400 [5.4]	12.65	14.50	76	1,650 [779]
	RCFL-A*6024+RXMD-C04	60,500 [17.7]	41,650 [12.2]	18,850 [5.5]	12.65	14.50	76	1,600 [755]

① Highest sales volume tested combination required by D.O.E. test procedures.

[ ] Designates Metric Conversions

Performance Data @ AHRI Standard Conditions—Cooling: UAPM- JAZ (continued)

Model Numbers		80°F [26.5°C] DB/67°F [19.5°C] WB Indoor Air 95°F [35°C] DB Outdoor Air					Sound Rating dB	Indoor CFM [L/s]
Outdoor Unit UAPM-	Indoor Coil and/or Air Handler	Total Capacity BTU/H [kW]	Net Sensible BTU/H [kW]	Net Latent BTU/H [kW]	EER	SEER		
Rev. 6/30/10	RCFL-A*6024B* (-GFD-12?RCM?)	61,000 [17.9]	42,550 [12.5]	18,450 [5.4]	12.65	14.50	76	1,650 [779]
	RCFL-A*6024B* (-GGD-12?RCM?)	60,500 [17.7]	42,100 [12.3]	18,400 [5.4]	12.65	14.50	76	1,650 [779]
	RCFL-A*6024B*+RXMD-C04	60,500 [17.7]	41,650 [12.2]	18,850 [5.5]	12.65	14.50	76	1,600 [755]
	RCFL-H*6024 (-GFD-12?RCM?)	61,000 [17.9]	42,550 [12.5]	18,450 [5.4]	12.65	14.50	76	1,650 [779]
	RCFL-H*6024 (-GGD-12?RCM?)	60,500 [17.7]	42,100 [12.3]	18,400 [5.4]	12.65	14.50	76	1,650 [779]
	RCFL-H*6024 (-GJD-12?RCM?)	60,500 [17.7]	42,100 [12.3]	18,400 [5.4]	12.65	14.50	76	1,650 [779]
	RCFL-H*6024A* (-GFD-12?RCM?)	61,000 [17.9]	42,550 [12.5]	18,450 [5.4]	12.65	14.50	76	1,650 [779]
	RCFL-H*6024A* (-GGD-12?RCM?)	60,500 [17.7]	42,100 [12.3]	18,400 [5.4]	12.65	14.50	76	1,650 [779]
060JAZ	RCFL-H*6024A* (-GJD-12?RCM?)	60,500 [17.7]	42,100 [12.3]	18,400 [5.4]	12.65	14.50	76	1,650 [779]
	-BHP-25 (RCHL-60A1)	54,000 [15.8]	35,850 [10.5]	18,150 [5.3]	11.50	13.50	76	1,800 [849]
	RCQD-6024A*+RXMD-C04	56,000 [16.4]	37,900 [11.1]	18,100 [5.3]	11.50	13.50	76	1,600 [755]
	-HKL-HM6024 (RCSL-H*6024)	62,000 [18.2]	44,700 [13.1]	17,300 [5.1]	13.40	15.00	76	1,800 [849]
	-HLL-HM6024 (RCSL-H*6024)	62,500 [18.3]	45,400 [13.3]	17,100 [5.0]	13.50	15.00	76	1,825 [861]
	-HSL-HM6024 (RCSL-H*6024)	60,500 [17.7]	43,150 [12.6]	17,350 [5.1]	12.15	13.50	76	1,750 [826]
	-HKL-HM6024 (RCSL-H*6024A*)	62,000 [18.2]	44,700 [13.1]	17,300 [5.1]	13.40	15.00	76	1,800 [849]
	-HLL-HM6024 (RCSL-H*6024A*)	62,500 [18.3]	45,400 [13.3]	17,100 [5.0]	13.50	15.00	76	1,825 [861]
	-HSL-HM6024 (RCSL-H*6024A*)	60,500 [17.7]	43,150 [12.6]	17,350 [5.1]	12.15	13.50	76	1,750 [826]

① Highest sales volume tested combination required by D.O.E. test procedures.

[ ] Designates Metric Conversions

Electrical and Physical Data: UAPM- JAZ

Model Number UAPM-	ELECTRICAL							PHYSICAL					
	Phase Frequency (Hz) Voltage (Volts)	Compressor		Fan Motor Full Load Amperes (FLA)	Minimum Circuit Ampacity Amperes	Fuse or HACR Circuit Breaker		Outdoor Coil			Refrig. Per Circuit Oz. [g]	Weight	
		Rated Load Amperes (RLA)	Locked Rotor Amperes (LRA)			Minimum Amperes	Maximum Amperes	Face Area Sq. Ft. [m²]	No. Rows	CFM [L/s]		Net Lbs. [kg]	Shipping Lbs. [kg]
Rev. 3/11/2010													
018JAZ	1-60-208/230	9/9	48	1.9	14/14	20/20	20/20	11 [1.02]	1	1955 [923]	82 [2325]	138.5 [62.8]	160.5 [72.8]
024JAZ	1-60-208/230	13.5/13.5	58.3	1.1	18/18	25/25	30/30	20 [1.86]	1	3295 [1555]	128 [3629]	192.5 [87.3]	214.5 [97.3]
030JAZ	1-60-208/230	12.8/12.8	64	1.9	18/18	25/25	30/30	20 [1.86]	1	3645 [1720]	129 [3657]	193 [87.5]	214 [97.1]
036JAZ	1-60-208/230	16/16	79	1.9	22/22	30/30	35/35	23.01 [2.14]	1	3680 [1737]	146 [4139]	197.5 [89.6]	227 [103]
042JAZ	1-60-208/230	17.9/17.9	112	2.8	26/26	30/30	40/40	23.01 [2.14]	1	3925 [1852]	152 [4309]	223 [101.2]	256 [116.1]
048JAZ	1-60-208/230	21.8/21.8	117	2.8	31/31	40/40	50/50	23.01 [2.14]	2	3685 [1739]	203 [5755]	264 [119.8]	298 [135.2]
056JAZ	1-60-208/230	21.4/21.4	135	2.8	30/30	35/35	50/50	23 [2.14]	2	4350 [2053]	255 [7229]	269.5 [122.2]	306.5 [139]
060JAZ	1-60-208/230	26.4/26.4	134	2.8	36/36	45/45	60/60	23 [2.14]	2	4350 [2053]	262 [7428]	269.5 [122.2]	306.5 [139]

Unit Dimensions

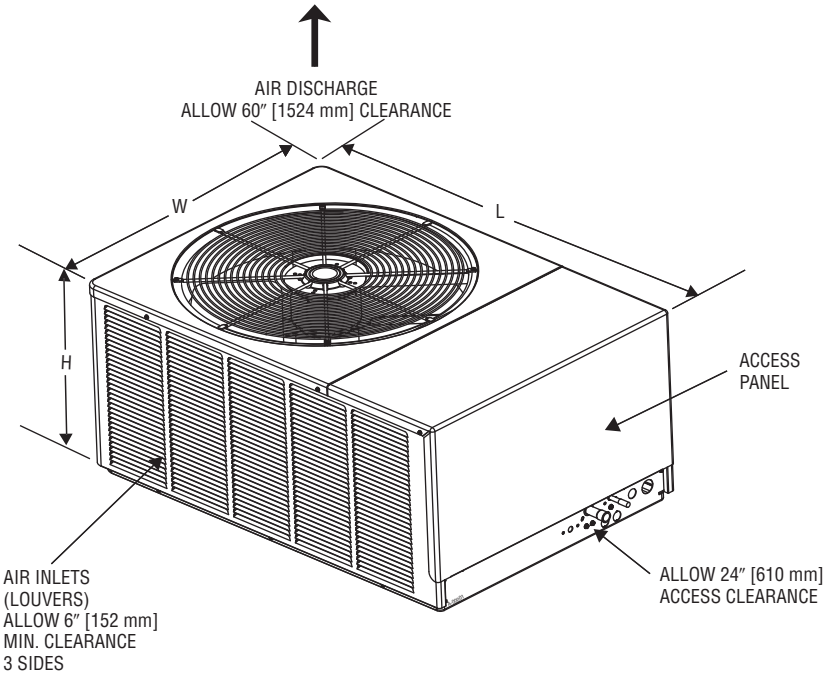

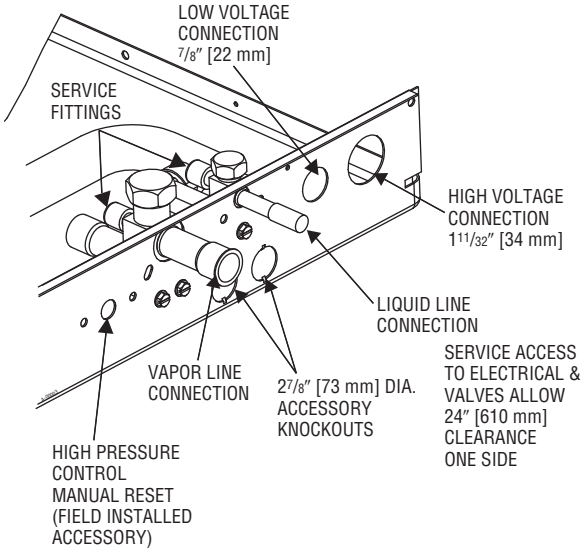

Model Number UAPM-	Height "H" (Inches) [mm]	Length "L" (Inches) [mm]	Width "W" (Inches) [mm]
018	19 [483]	40 1/2 [1029]	27 5/8 [702]
024/030	29 [737]	44 3/8 [1127]	31 1/2 [800]
036/042/ 048/056/060	33 [838]	44 3/8 [1127]	31 1/2 [800]

[ ] Designates Metric Conversions

BEFORE PURCHASING THIS APPLIANCE, READ IMPORTANT ENERGY COST AND EFFICIENCY INFORMATION AVAILABLE FROM YOUR RETAILER.

GENERAL TERMS OF LIMITED WARRANTY

Ruud will furnish a replacement for any part of this product which fails in normal use and service within the applicable period stated, in accordance with the terms of the limited warranty.

***For Complete Details of the Limited Warranty, Including Applicable Terms and Conditions, See Your Local Installer or Contact the Manufacturer for a Copy.**

Compressor .....Ten (10) Years
Conditional Parts*
(Registration Required) .....Ten (10) Years

Condensing Unit Refrigerant Line Size Information

Liquid Line Sizing (R-410A)														
System Capacity	Line Size Connection (Inch I.D.)	Line Size (Inch O.D.) [mm]	Liquid Line Size – Outdoor Unit Above Indoor Coil (Cooling Only – Does not apply to Heat Pumps)						Liquid Line Size – Outdoor Unit Below Indoor Coil					
			Total Equivalent Length—Feet [m]						Total Equivalent Length—Feet [m]					
			25 [7.62]	50 [15.24]	75 [22.86]	100 [30.48]	125 [38.10]	150 [45.72]	25 [7.62]	50 [15.24]	75 [22.86]	100 [30.48]	125 [38.10]	150 [45.72]
			Minimum Vertical Separation—Feet [m]						Maximum Vertical Separation—Feet [m]					
1½ Ton	3/8″	1/4 [6.35]	0	0	0	0	8 [2.44]	24 [7.32]	25 [7.62]	40 [12.19]	25 [7.62]	9 [2.74]	N/A	N/A
		5/16 [7.94]	0	0	0	0	0	0	25 [7.62]	50 [15.24]	62 [18.90]	58 [17.68]	53 [16.15]	49 [14.94]
		3/8* [9.53]	0	0	0	0	0	0	25 [7.62]	50 [15.24]	75 [22.86]	72 [21.95]	70 [21.34]	68 [20.73]
2 Ton	3/8″	1/4 [6.35]	0	3 [0.91]	29 [8.84]	55 [16.76]	81 [24.69]	108 [32.92]	23 [7.01]	N/A	N/A	N/A	N/A	N/A
		5/16 [7.94]	0	0	0	0	0	0	25 [7.62]	36 [10.97]	29 [8.84]	23 [7.01]	16 [4.88]	9 [2.74]
		3/8* [9.53]	0	0	0	0	0	0	25 [7.62]	50 [15.24]	72 [21.95]	70 [21.34]	68 [20.73]	65 [19.81]
2½ Ton	3/8″	1/4 [6.35]	0	14 [4.27]	56 [17.07]	98 [29.87]	N/A	N/A	25 [7.62]	N/A	N/A	N/A	N/A	N/A
		5/16 [7.94]	0	0	0	0	0	0	25 [7.62]	49 [14.94]	38 [11.58]	27 [8.23]	17 [5.18]	6 [1.83]
		3/8* [9.53]	0	0	0	0	0	0	25 [7.62]	50 [15.24]	68 [20.73]	65 [19.81]	62 [18.90]	58 [17.68]
3 Ton	3/8″	5/16 [7.94]	0	0	0	0	0	9 [2.74]	25 [7.62]	50 [15.24]	37 [11.28]	22 [6.71]	7 [2.13]	N/A
		3/8* [9.53]	0	0	0	0	0	0	25 [7.62]	50 [15.24]	68 [20.73]	63 [19.20]	58 [17.68]	53 [16.15]
3½ Ton	3/8″	5/16 [7.94]	0	0	0	16 [4.88]	35 [10.67]	54 [16.46]	25 [7.62]	23 [7.01]	4 [1.22]	N/A	N/A	N/A
		3/8* [9.53]	0	0	0	0	0	0	25 [7.62]	50 [15.24]	43 [13.11]	36 [10.97]	30 [9.14]	24 [7.32]
4 Ton	3/8″	3/8* [9.53]	0	0	0	0	0	0	25 [7.62]	46 [14.02]	38 [11.58]	30 [9.14]	22 [6.71]	15 [4.57]
		1/2 [12.57]	0	0	0	0	0	0	25 [7.62]	50 [15.24]	56 [17.07]	55 [16.76]	53 [16.15]	52 [15.85]
5 Ton	3/8″	3/8* [9.53]	0	0	0	0	0	0	25 [7.62]	50 [15.24]	56 [17.07]	44 [13.41]	32 [9.75]	20 [6.10]
		1/2 [12.57]	0	0	0	0	0	0	25 [7.62]	50 [15.24]	75 [22.86]	81 [24.69]	79 [24.08]	76 [23.16]

NOTES: *Standard line size
N/A = Application not recommended.

Suction Line Length/Size versus Capacity Multiplier (R-410A)								
Unit Size		1½ Ton	2 Ton	2½ Ton	3 Ton	3½ Ton	4 Ton	5 Ton
Suction Line Connection Size		3/4" [19.05 mm] I.D.			7/8" [22.23 mm] I.D.			
Suction Line Run— Feet [m]		5/8" [15.88 mm] O.D. Opt. 3/4" [19.05 mm] O.D. Std.*		5/8" [15.88 mm] O.D. Opt. 3/4" [19.05 mm] O.D. Std.* 7/8" [22.23 mm] O.D. Opt.	3/4" [19.05 mm] O.D. Opt. 7/8" [22.23 mm] O.D. Std.*		7/8" [22.23 mm] O.D. Opt. 1 1/8" [28.58 mm] O.D. Std.*	
25' [7.62]	Optional	1.00	1.00	1.00	1.00	1.00	1.00	1.00
	Standard	1.00	1.00	1.00	1.00	1.00	1.00	1.00
	Optional	N/A	N/A	1.00	N/A	N/A	N/A	N/A
50' [15.24]	Optional	.98	.98	.96	.98	.99	.99	.99
	Standard	.99	.99	.98	.99	.99	.99	.99
	Optional	N/A	N/A	.99	N/A	N/A	N/A	N/A
100' [30.48]	Optional	.95	.95	.94	.96	.96	.96	.97
	Standard	.96	.96	.96	.97	.98	.98	.98
	Optional	N/A	N/A	.97	N/A	N/A	N/A	N/A
150' [45.72]	Optional	.92	.92	.91	.94	.94	.95	.94
	Standard	.93	.94	.93	.95	.96	.96	.97
	Optional	N/A	N/A	.95	N/A	N/A	N/A	N/A

NOTES: *Standard line size
Using suction line larger than shown in chart will result in poor oil return and is not recommended.

[ ] Designates Metric Conversions

NOTES

Before proceeding with installation, refer to installation instructions packaged with each model, as well as complying with all Federal, State, Provincial, and Local codes, regulations, and practices.

Ruud Heating,
Cooling and
Water Heating

P.O. Box 17010, Fort Smith, AR 72917

"In keeping with its policy of continuous progress and product improvement, Ruud reserves the right to make changes without notice."

PRINTED IN U.S.A. 3-11 DC

FORM NO. A22-199 REV. 4
Supersedes Form No. A22-199 Rev. 3