Warrior DV The Direct Vent Gas Water Heater for Manufactured Housing

Available in 30, 40 and 50 Gallon Models

▶ 5-Year Limited Tank Warranty* ▶ 1-Year Limited Parts Warranty*

- No external vented door is required
- All combustion air comes from outside the home
- Provides maximum design freedom since it can be placed anywhere within the home
- Hot water outlet located at top
- Factory installed temperature and pressure relief valve – side location.
- Exclusive Rheemglas® tank lining resists corrosion and prolongs tank life
- Field convertable controls for natural gas or LP operation
- Meets or exceeds National Appliance Energy Conservation Act (NAECA) requirements
- Peizo ignitor – easy light pilot
- Certified for manufactured (HUD) and modular construction
- Anode rod equalizes aggressive water action
- Cold water inlet – side connection allows for fast, economical hook-up

*See Residential Warranty Information Brochure for complete warranty information.

Energy Factor and Average Annual Operating Costs based on D.O.E. (Department of Energy) test procedures. D.O.E. national average fuel rate natural gas $1.218/therm; LP $1.87/gallon.

DESCRIPTION			FEATURES			ROUGHING IN DIMENSIONS (SHOWN IN INCHES)									ENERGY INFORMATION		
TYPE	GAL. CAP.	MODEL NUMBER	GAS INPUT IN THOUS. BTU/HR. NAT/ LP	RECOVERY IN G.P.H. 90° RISE NAT./LP	FIRST HOUR DEL. G.P.H. NAT./ LP	HT. TO VENT A	TANK HT. B	DIAM. C	HT. TO GAS CONN. D	VENT SIZE E	ROOF JACK VENT SZ. F	HT. TO SIDE T&P G	WATER CONN. H	SHIP. WT. (LBS)	ENERGY FACTOR NAT./LP	AVG. ANN. OPER. COSTS NAT.	AVG. ANN. OPER. COSTS LP
TALL	30	21VR30DV	30	30.3	51	57	57	17-3/4	14-1/2	3	5	51-1/2	20	110	0.61	$299	$503
	40	21VR40DV	30	30.3	60	57-1/2	57-1/2	19-3/4	14-1/2	3	5	51-1/2	20	125	0.59	$309	$520
	50	21VR50DV	32	32.3	67	57	57	21-3/4	14-1/2	3	5	51-1/2	20	150	0.58	$315	$529

Adjustable Roof Jack Vent
Design allows adjustment to roof pitches of up to 5/12". Four roof jacks available to accommodate roof thickness of 12" up to 95".

Direct Combustion Air Inlet
Air is drawn directly into combustion chamber through air inlet fixed to base; 1/2" screen for rodent protection.

These units are designed to meet or exceed ANSI (American National Standards Institute) requirements and have been tested according to D.O.E. test procedures and meet or exceed the energy efficiency requirements of NAECA, ASHRAE standard 90, ICC Code and all state energy efficiency performance criteria for energy consuming appliances.

Before purchasing this appliance, read important energy cost and efficiency information available from your supplier.

ROOF JACKS	
12" Non Adjustable & Air Inlet	AP12032E
15-32" Adjustable & Air Inlet	AP12032B
30-60" Adjustable & Air Inlet	AP12032C
48-95" Adjustable & Air Inlet	AP12032D
AIR INLETS	
6" Non Adjustable	AP12019B
11-22" Adustable	AP12017B
EXTENSION PIPE KIT	
Roof Jack Extension Pipe Kit	AP12021

- Roof jack and air inlet must be ordered separately with 30, 40 and 50 gallon direct vent models and must be in accordance with instructions furnished with the heater. No other roof jack or air inlet assemblies are approved for installation with this heater. Clamps and secure strapping are packed in water heater carton.

THE WARRIOR DV IS U.L. CERTIFIED FOR MANUFACTURED HOME USE, MEETS ANSI STANDARDS FOR MODULAR HOME CONSTRUCTION, AND COMPLIES WITH HUD SAFETY AND CONSTRUCTION STANDARDS.

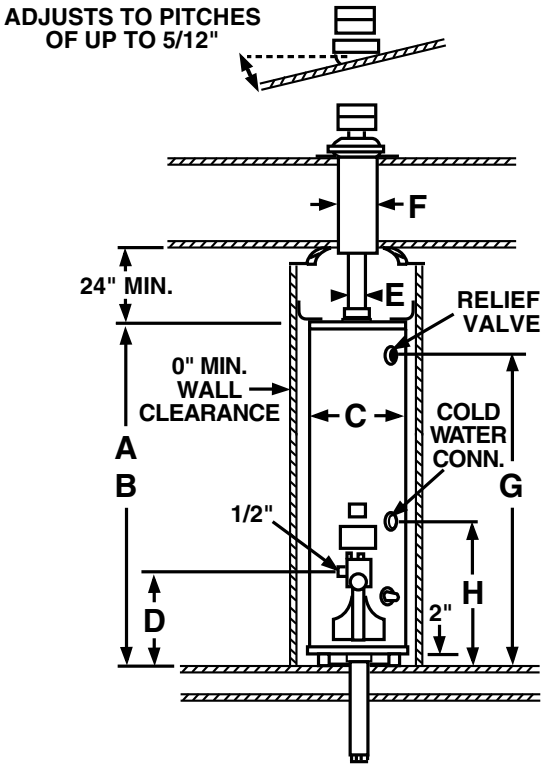

WATER CONNECTIONS ALL 3/4" N.P.T.

*FOUR ROOF JACKS AVAILABLE TO ACCOMMODATE ROOF THICKNESS OF 12" UP TO 95"

In keeping with its policy of continuous progress and product improvement, Rheem reserves the right to make changes without notice.

Rheem Water Heaters • 101 Bell Road, Montgomery, Alabama 36117-4305 • www.rheem.com

PRINTED IN U.S.A 07/08 WP FORM NO. 102GW-9 Rev. 4